Ohio Public Utilities Commission

Combined Heat and Power Case Studies:
Voices of Experience

June 20, 2012

Landfill Gas & Digester Gas Combined Cycle Cogeneration Facility

The City of Toledo, OH

IMPROVEMENT 53

City of Toledo
BAY VIEW WWTP

Solar® Turbines
A Caterpillar Company

middough®

IMPROVEMENT 53
BAY VIEW WASTEWATER TREATMENT PLANT
ELECTRICAL POWER COGENERATION SYSTEM AND RELATED FACILITIES

The Landfill & Digester Gas Cogeneration system consists of:

- Fuel transmission and supply of the Hoffman Road landfill gas and Bay View WWTP digester gas, including gas cleaning and mixing.
- Electrical combined cycle cogeneration consisting of a combustion gas turbine and heat recovery steam generator, (HRSG), with a minimum design load capability of 10MW. (Excess heat produced by the system used for local building heating and other plant facilities.)
- Building additions at the Bay View WWTP and Hoffman Road Landfill.

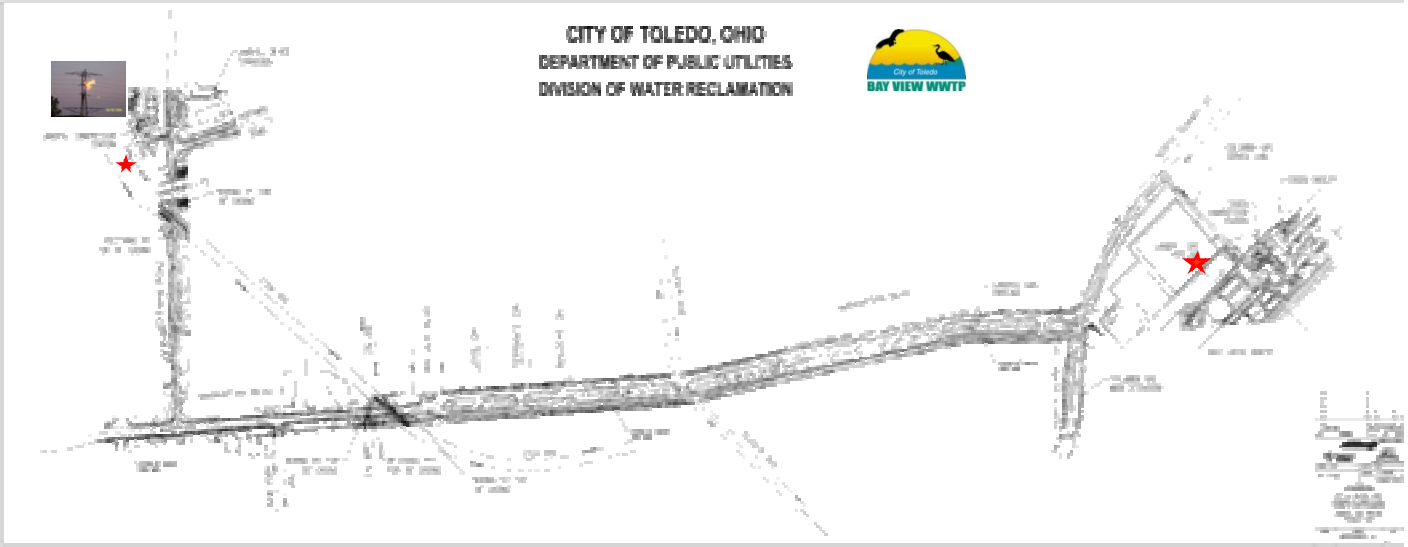

middlough

LMOP Landfill Methane Outreach Program

E-Plus & LandGEM LFG Projection Curves

LANDFILL METHANE OUTREACH PROGRAM

U.S. Environmental Protection Agency

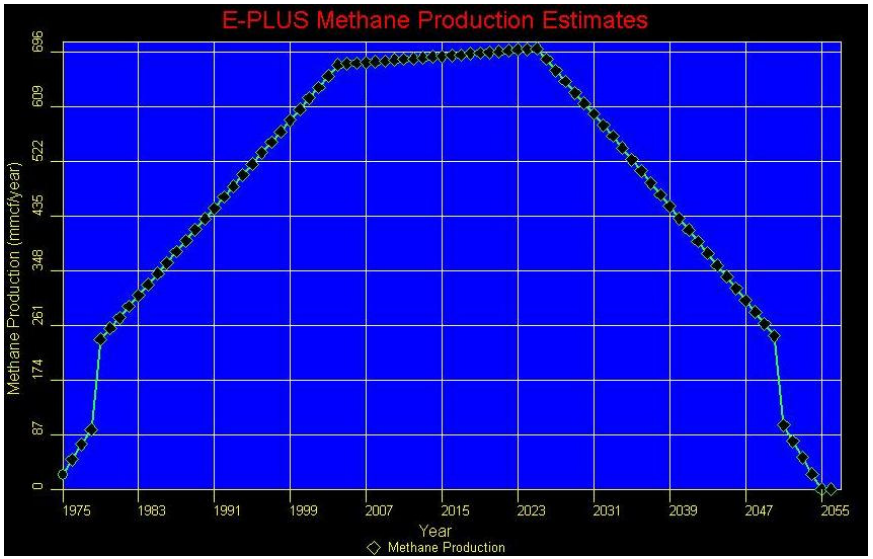

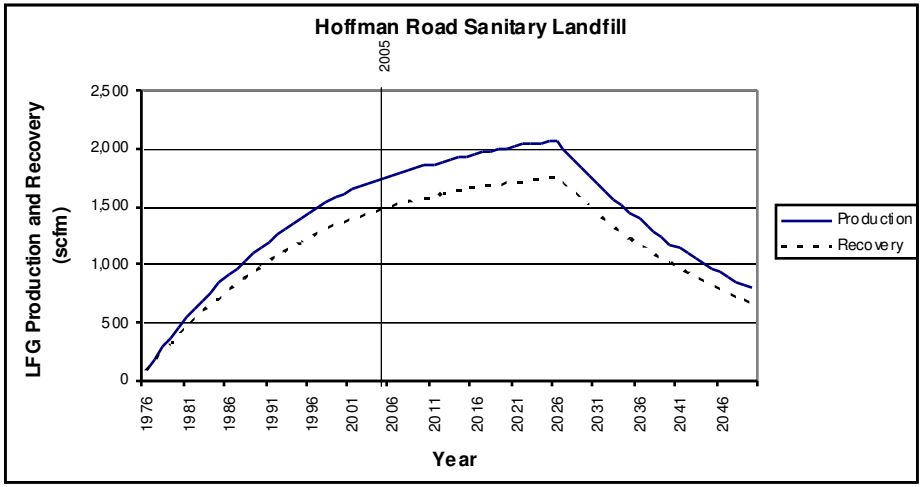

Environmental Benefits Analysis

Annual Average Environmental Benefits From Recovering the Landfill Gas:

Methane Emissions:	1,138.88 thousand tons avoided/year, averaged over the life of the project
	34,166.29 thousand tons avoided total during the project
CO2 Equivalent:	23,916.41 thousand tons avoided/year, averaged over the life of the project
	717,492.19 thousand tons avoided total during the project

Max. LFG Flow from 1975 to 2057	1,405	mmcf/yr
Max. CH4 Flow from 1975 to 2057	703	mmcf/yr
Avg. LFG Flow from 1975 to 2057	941	mmcf/yr
Avg. CH4 Flow from 1975 to 2057	471	mmcf/yr
Max. LFG Flow Project Life 2007 to 2037	1,405	mmcf/yr
Max. CH4 Flow Project Life 2007 to 2037	703	mmcf/yr
Avg. LFG Flow Project Life 2007 to 2037	1,269	mmcf/yr
Avg. CH4 Flow Project Life 2007 to 2037	634	mmcf/yr

SAVING THE PLANET ONE LANDFILL AT A TIME

middough

2010 LMOP
Project of the Year Award

Combined Cycle Cogeneration

City of Toledo, Bay View WWTP

- AECM for 10 MW landfill & digester gas cogeneration
  - 2 Mile LFG Pipeline, 5 kV Feeder, Fiber Optic Tie
  - Combustion Turbine & Generator (CT)
  - Heat Recovery Steam Generator (HRSG & BMS)
  - Steam Turbine & Generator (ST)
  - Paralleling Switchgear & Control
  - Facility PLC/HMI Control System
  - Black Start Generation & Island Operation
  - Landfill & Digester Gas Treatment Equipment
  - High & Low Pressure Gas Compressors
  - LFG/DG -NG Gas Mixing Station

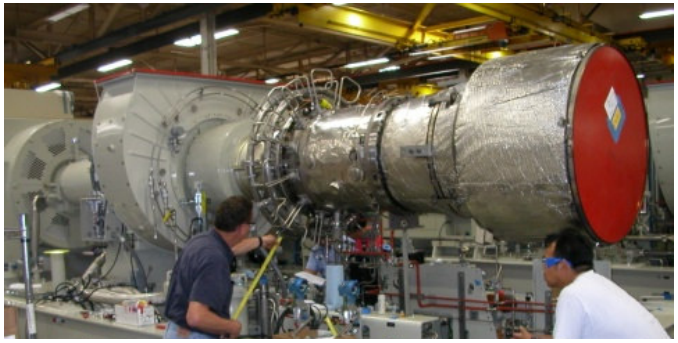

middlough

City of Toledo Improvement 53

Cogeneration Block Diagram

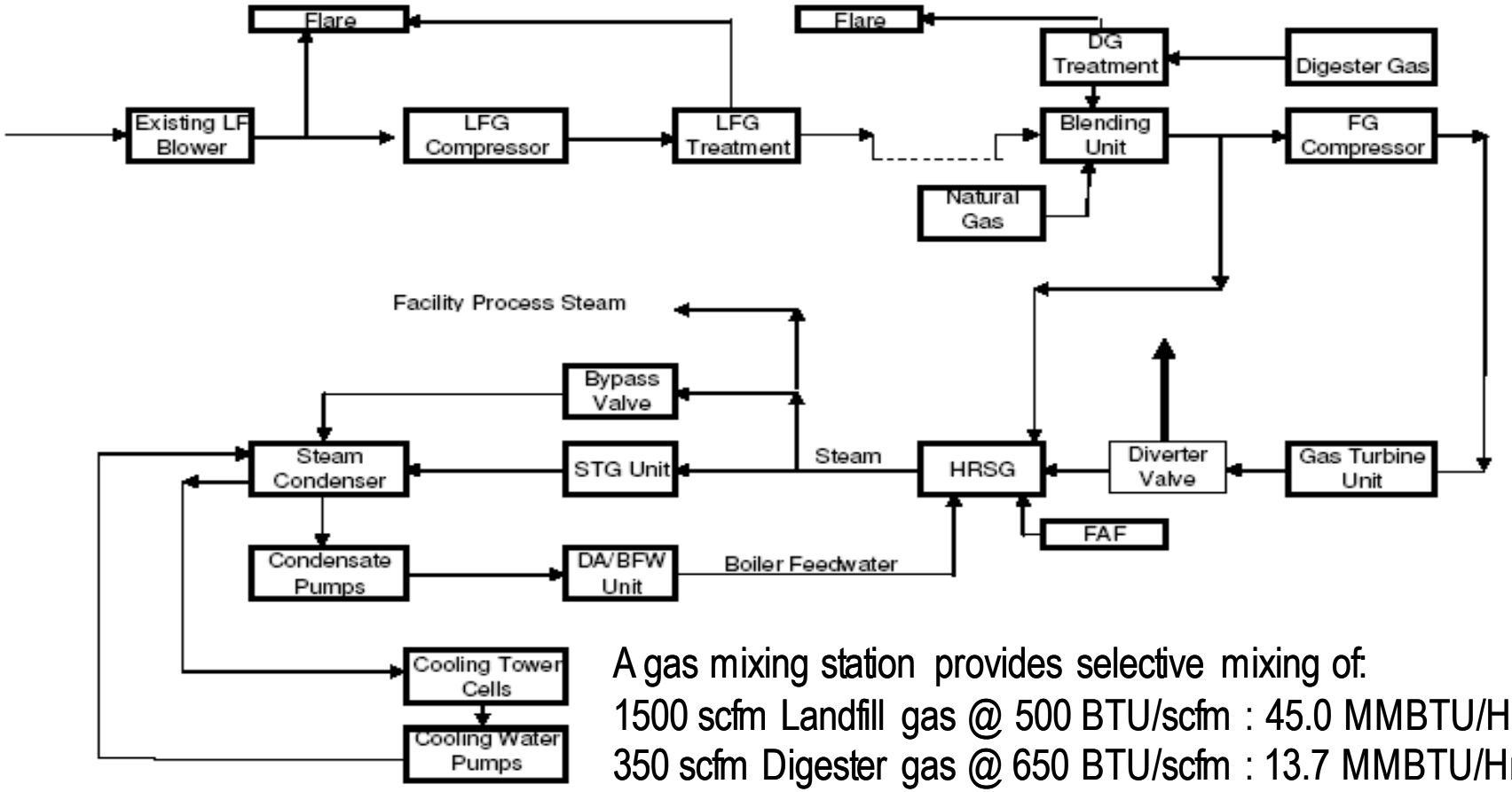

A gas mixing station provides selective mixing of:
1500 scfm Landfill gas @ 500 BTU/scfm : 45.0 MMBTU/Hr
350 scfm Digester gas @ 650 BTU/scfm : 13.7 MMBTU/Hr
and Natural gas @ 1000 BTU/scfm

Solar Turbines
A Caterpillar Company

middlough

Combustion Turbine

Dual Gas Wide Wobbe Fuel Assembly
Dual Gas LBTU Wide Wobbe Injectors

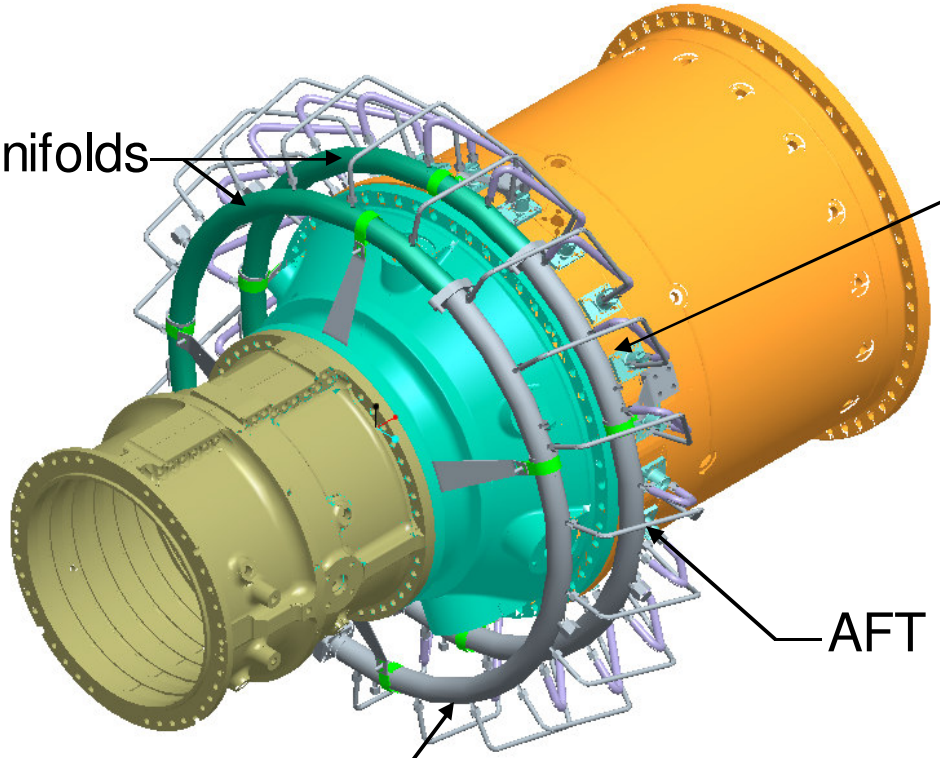

Solar Turbines
A Caterpillar Company

middlough

Cogeneration Facility

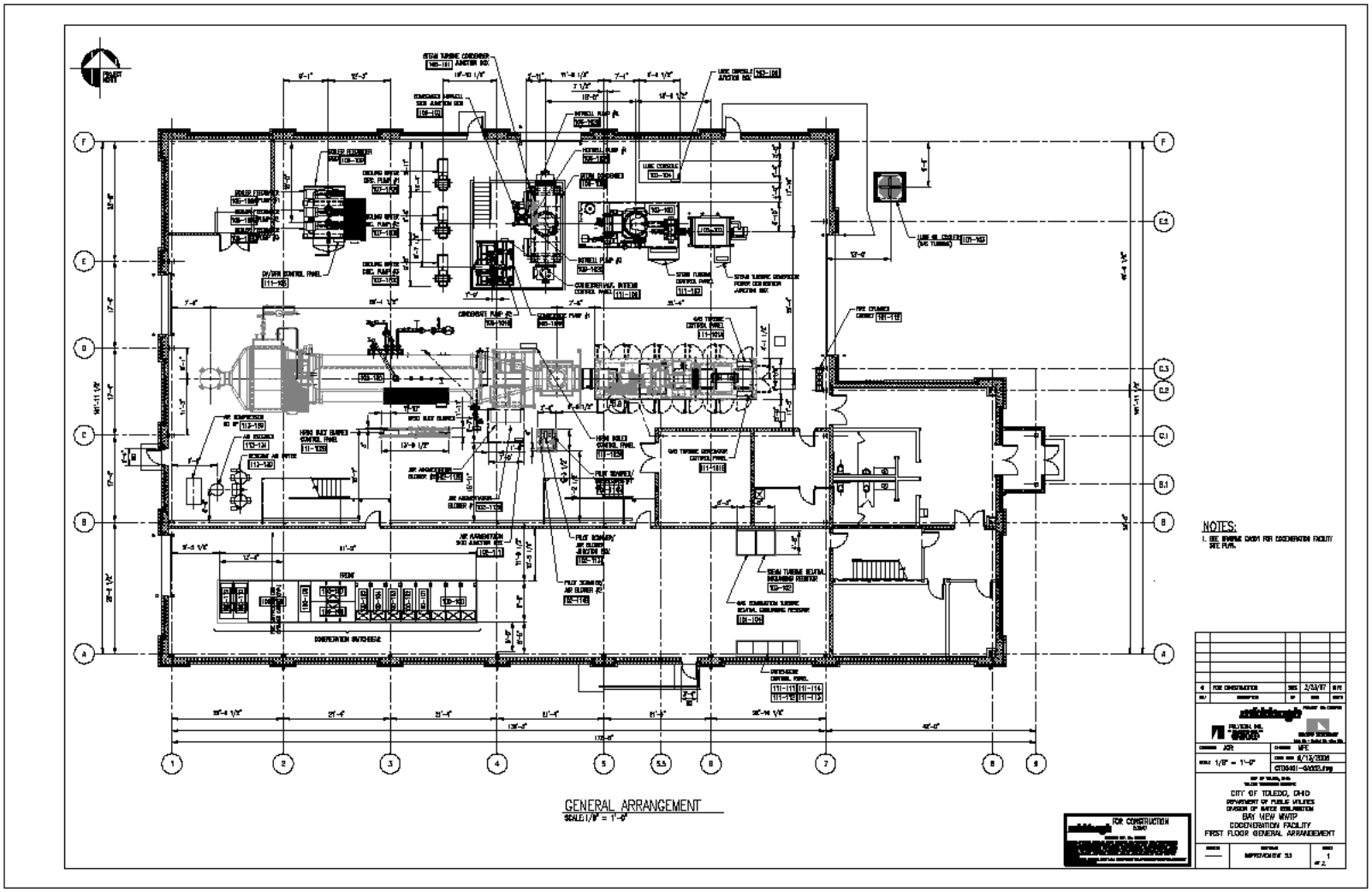

middough

Cogeneration Facility

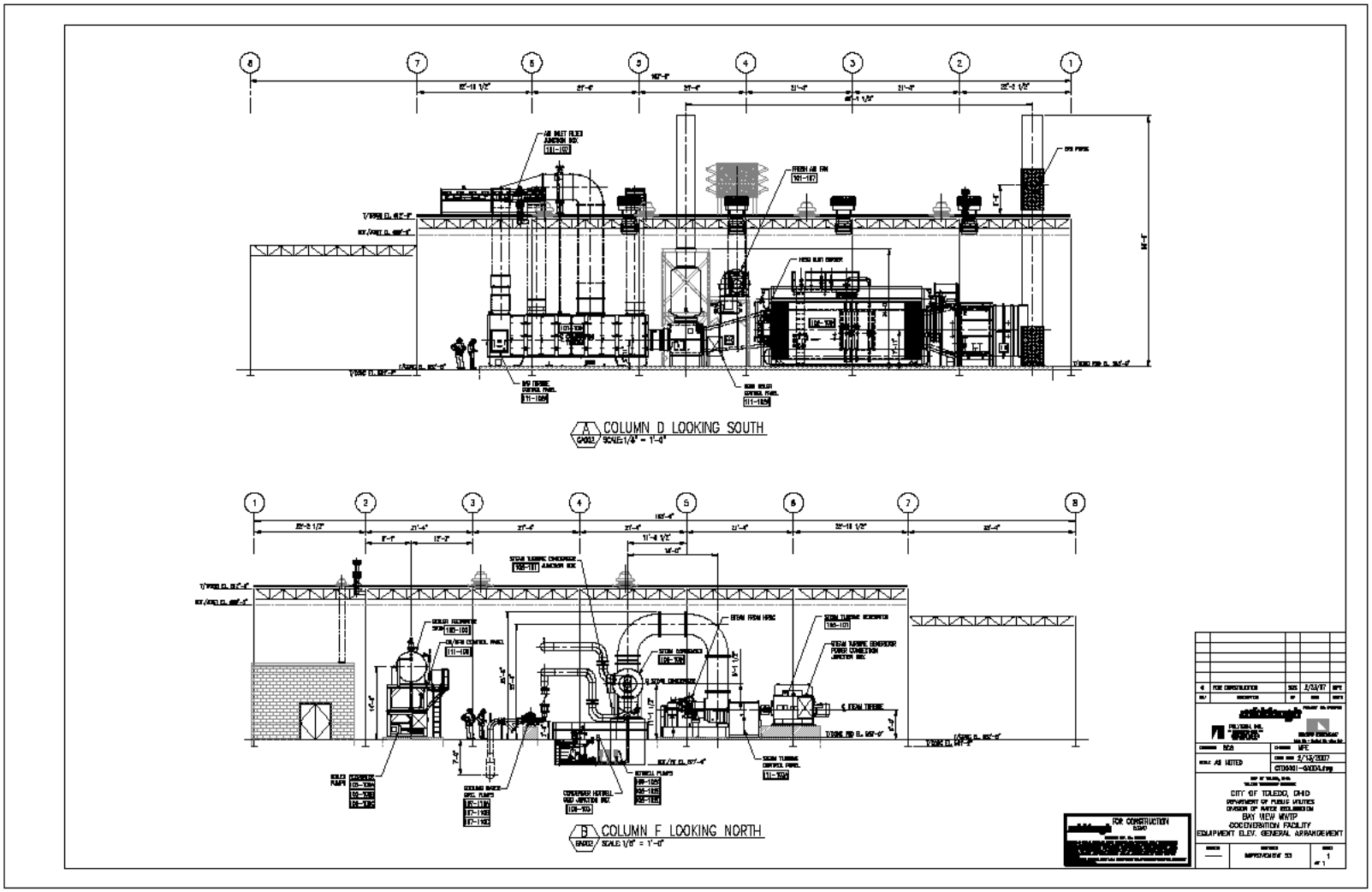

middough

Cogeneration Facility

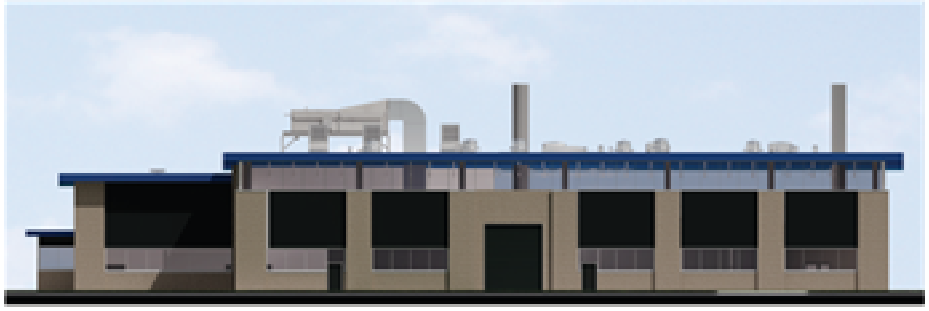

North Elevation

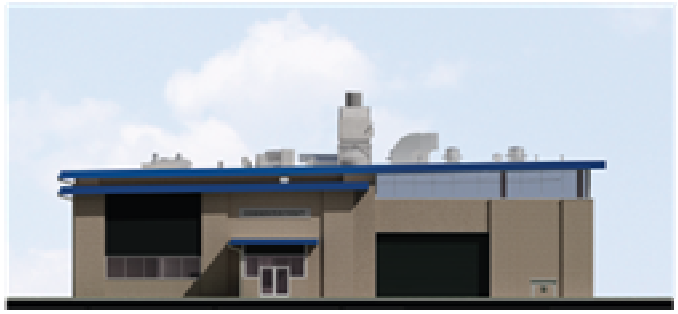

East Elevation

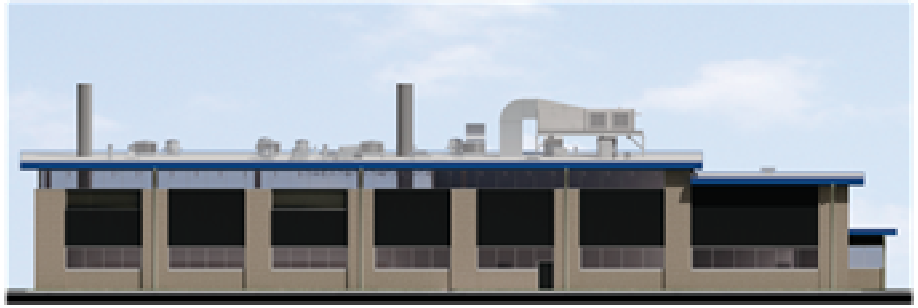

South Elevation

West Elevation

middough

ELEVATIONS
(Option 1)

CITY OF TOLEDO
DEPARTMENT OF PUBLIC UTILITIES
DIVISION OF WATER RECLAMATION
COGENERATION FACILITY

middough

Combustion Turbine

Solar® Turbines

A Caterpillar Company

middlough®

Commissioning…

middlough®

Commissioning…

middlough®

Commissioning…

middlough®

Commissioning…

middlough®

Commissioning…

middlough®

Commissioning…

middlough®

Commissioning…

middlough®

Commissioning…

middlough®

Commissioning…

middlough®

Commissioning…

middlough®

General CHP/DG Review Items

- CHP/DG Interconnection Process
- CHP/DG Applications & Terms
- CHP/DG System Considerations
- CHP/DG Next Steps
- General Discussion

middlough®

CHP/DG Interconnection Process

- Distributed Generation equipment and the Interconnection Process, what is involved and required in this process. (System Considerations)
- Best Practices (Design Considerations)
- Suggested/Required Meetings
- Utility Requirements
  - Utility Coordination & Protection Issues
  - Application & Required Information
- IEEE1547, IEEE1547.1, and UL1741 Interconnection Compliance

IEEE 1547

middlough

CHP/DG Applications & Terms

- Stand-By Power / Emergency Power
- Prime Power
- Peak Shaving, Load Shedding, Load Sharing, Base Loading
- Cogeneration and Combined Heat & Power
- Grid Connected, Islanding, Black Start
- Make Before Break and Ramped Transition
- Extended Parallel Non-Flow Back
- Extended Parallel Flow Back
- Protective Relaying, Reverse Power, Intertie Protection, SCADA
- Utility Power Plant Generation
- Transmission & Distribution
- Interconnection Process and Application
- DLS – Detailed Load Study, RTO's
- Stand-by Charges, Net Metering

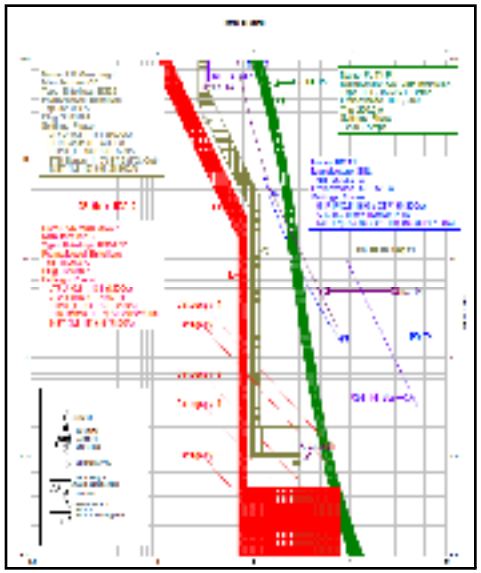

middlough

CHP/DG System Considerations

- "Fuel" Source – Quantity & Availability Profile
  - Equiv BTU Content and HHV/LHV Values
  - Treatment & Utilization Requirements, Storage Requirements
- DG Equipment Options – Best Fit Evaluation including System % Efficiency
  - Electric, Steam, Hot Water, Chilled Water Facility Needs/Use
- Facility Load Profile – Best Use Integration: Load Share vs. Base Loading
- Utility Interconnection Requirements / Use of Power: Prime vs. Standby
  - Standby Charges, Interruptible Rate, Net Metering, RTO's
- System Reliability Requirements
- Environmental and Emissions Permitting Requirements
- Green Energy Credits: REC's, Green Tags, Carbon Offset Credits, etc.
- Rate of Return, Payback, and Life Cycle Analysis
- Community Involvement
- Project Champion(s)
- Others……

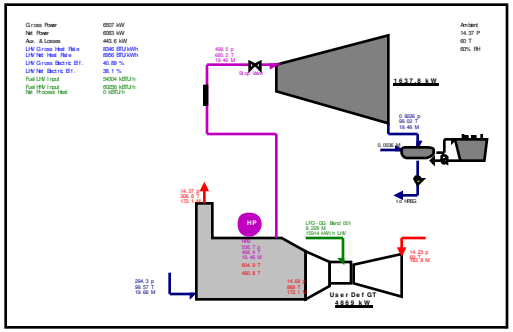

middough

CHP/DG Next Steps

- Project Cost & Schedule Development
- Finalize Preferred Option(s)
  - Confirm Electrical & Steam/HW/CW Reqmts
  - Confirm Fuel Sources
  - Solicit Vendor Performance & Cost
- Solidify Preliminary 'Total-Installed-Cost'
  - Develop Preliminary Layout, PFD's, Single Lines & Installed Cost(s)
- Further Environmental Permitting
  - Air, Water, Site, BMACT, NSPS, State, Federal, PTI, PTO … (overall strategy)
- Further Utility Interconnection Requirements
  - Begin DLS Process, and RTO's as required
- Determine Engineering/Construction/Management Delivery Model

middlough®

General Discussion

- Technology Selected
- How Was Funding Obtained
- Project Payback Period
- Significant Costs
- Utility Company Arrangements
- Environmental Considerations
- Barriers (such as) :
  - Construction/permitting/interconnection schedules
  - Significant capital costs
  - Standby power rates / exit fees
  - New source permitting

Ohio | Public Utilities Commission

Combined Heat and Power Case Studies: Voices of Experience

June 20, 2012

middlough