CLEVELAND THERMAL STEAM DISTRIBUTION, LLC

TARIFF FOR DISTRICT STEAM SERVICE

P.U.C.O. No. 2

Communications concerning this tariff may be addressed to:

Mail: Mark Divis
1921 Hamilton Avenue
Cleveland, OH 44114
Telephone: 216-241-4274
E-mail: mdivis@clevelandthermal.com

Filed pursuant to the Finding and Order dated May 23, 2012 in Case No. 12-1451-HT-ATA of The Public Utilities Commission of Ohio.

Issued: May 24, 2012 Issued by Mark G. Divis, President Effective: May 24, 2012

TARIFF SHEET INDEX

Tariff Sheet	Description
1	Title Page
2	Tariff Sheet Index
	Rules and Regulations
3	Definitions
4	Availability of District Steam Service
4	District Steam Agreement
4	Responsibilities
4	Denying Service Due To Indebtedness
4	Denying Service Due To Location
5	Temporary Service and Temporary Suspension of Service
5	Security Regulations
5	Redistribution of Steam
6	Termination of Steam Service
7	Reconnecting Service
7	Customer's Use of Service
7	Customer Bills
8	Meter Installation, Operation and Testing
9	Accounting
9	Continuity of Service and Liability
9	Company Facilities
	Service Schedules
10	Default District Steam Service
18	Rate Schedule for Default District Steam Service
20	Schedule of Incorporated Rate-Related Provisions
Appendix A	Standard Steam Supply and Distribution Agreement

RULES AND REGULATIONS

1. DEFINITIONS

In addition to terms defined elsewhere herein, as used herein the following terms are defined as follows:

"Billing Period" shall mean each of approximately 12 periods in each calendar year, each approximating one service month.

"Btu" shall mean British thermal units.

"Building" shall mean the structure(s) or premises owned, leased or managed by the Customer or its agent for which District Steam Service is provided by the Company.

"Company" shall mean Cleveland Thermal Steam Distribution, LLC.

"Customer" shall mean that entity, its officers, agents or employees, which enters into a District Steam Agreement with the Company to receive District Steam Service for the Building or receives District Steam Service for the Building pursuant to Sections 18 and 19 hereof.

"District Steam Agreement" shall mean the written agreement between the Customer and Company for District Steam Service for the Building containing the terms of service, rates and any other considerations specific to that relationship, which agreement may be in the form of the Standard Contract, any other standard form of contract offered by Company approved by PUCO or any reasonable arrangement approved by PUCO pursuant to Section 4905.31, Revised Code.

"District Steam Service" shall mean the service by which steam and/or hot water is obtained and distributed by Company through the Company's network of pipes to a Building for heating, hot water, air conditioning and/or process purposes.

"Mlbs" shall mean thousands of pounds of District Steam Service.

"Point of Delivery" shall mean the place within, at or near the Customer's Building where the Customer and Company agree that steam and/or hot water shall be delivered to the Customer and, if applicable, condensate or water shall be returned to Company, each as shall be designated in the District Steam Agreement or otherwise as mutually agreed by Customer and Company if Customer receives District Steam Service pursuant to Sections 18 and 19 hereof.

"PUCO" shall mean the Public Utilities Commission of Ohio.

"Redistribution" shall include "submetering" and shall mean the furnishing by the Customer of steam and/or hot water received from the Company to another entity for any purpose under any circumstances or arrangement, whether a charge is made for such service or not.

"Revised Code" shall mean the Ohio Revised Code, as from time to time in effect.

"Service Commencement Date" shall mean the earlier to occur of the date the Customer first receives District Steam Service or the date otherwise stated in the District Steam Agreement between Customer and Company.

"Standard Contract" shall mean the Standard Steam Supply and Distribution Agreement attached hereto as Appendix A.

"Tariff Customer" shall mean a Customer receiving District Steam Service pursuant to Sections 18 and 19 hereof.

RULES AND REGULATIONS (CONT.)

2. AVAILABILITY OF DISTRICT STEAM SERVICE

District Steam Service is available to those commercial, industrial and governmental entities with buildings which are located in the Cleveland area and abut the Company's steam distribution system or, if not abutting, as otherwise provided in Section 17A below. District Steam Service will be provided only to Customers who enter into a District Steam Agreement for a term of at least three (3) years, except as provided for in Sections 18 and 19 below. A written application may be required from each Customer before service will be commenced. A copy of the form of application, if any, will be furnished the Customer upon request. Copies of all steam rate schedules are available at the Company's business office and are available for public inspection during Company's normal office hours.

3. DISTRICT STEAM AGREEMENT

A. All Customers except Tariff Customers must sign a District Steam Agreement in order to receive District Steam Service. Except as provided in Sections 18 and 19 below, all terms, conditions, regulations, rates and other provisions governing District Steam Service for a Customer shall be included in the District Steam Agreement between Company and such Customer. All District Steam Agreements (other than those for service contemplated by Section 4905.34, Revised Code, such as those with governmental entities and charitable institutions) shall be submitted to and approved by the PUCO.

B. A District Steam Agreement may be in the form of the Standard Contract or any other contract approved by PUCO. In addition to the Standard Contract, the Company intends to offer a Standard Interruptible Steam Supply and Distribution Agreement containing terms and provisions substantially similar to those contained in the form of the Standard Contract in Appendix A, except for such changes appropriate to reflect the right of the Company to interrupt District Steam Service to Customer's Building in certain circumstances and the ability of the Customer to generate replacement service during such interruption using on-site systems in or available to the Building.

C. All District Steam Agreements and arrangements for service pursuant to Sections 18 and 19 hereof are subject to changes in rates, service, rules and regulations hereinafter put into effect by the Company, the PUCO or other public authority, as provided by law.

4. RESPONSIBILITIES

Tariff Customers shall be responsible for all provisions of Sections 1 through 19 of this Tariff, including all amendments, supplements and replacements of any thereof. Each Customer served pursuant to a District Steam Agreement shall be responsible for all provisions of Sections 1 through 17 of this Tariff, including all amendments, supplements and replacements of any thereof (except to the extent inconsistent with the provisions of the District Steam Agreement), in addition to the terms and conditions set forth in the District Steam Agreement applicable to such Customer's service.

5. DENYING SERVICE DUE TO INDEBTEDNESS

The Company may terminate, cancel, suspend or discontinue District Steam Service to any current or prior Customer, and may refuse service to any applicant for District Steam Service, if such Customer or applicant is in debt to the Company for service previously rendered or is a Customer whose service was previously canceled or terminated for non-payment or chronic late payment of bills for service or for violation or breach of its District Steam Agreement or Sections 18 and 19 hereof, as applicable.

6. DENYING SERVICE DUE TO LOCATION

The Company shall provide District Steam Service only at Points of Delivery served by existing street mains; provided, however, the Company, at its sole discretion, may extend its facilities to serve prospective loads but shall not be required to provide such service.

RULES AND REGULATIONS (CONT.)

7. TEMPORARY SERVICE AND TEMPORARY SUSPENSION OF SERVICE

A. Unless otherwise agreed to by Company, in its sole discretion, any applicant for District Steam Service desiring temporary service shall pay the entire costs of installing and removing such temporary service in addition to all applicable rates and charges for District Steam Service during the period of temporary service.

B. Company may agree, in its sole discretion, to suspend service to a Customer upon Customer's written request. In the event that Company agrees to such suspension, Customer shall be required to pay a disconnection charge and a reconnection charge, in each case equal to the actual labor and materials cost of disconnection and reconnection, respectively, and shall also be responsible for payment: (i) if a Tariff Customer, of an amount equal to a minimum Billing Period charge of Three Hundred Dollars ($300) for each Billing Period occurring during any part of the suspension from October 1 through and inclusive of May 31; and (ii) if a Customer receiving service pursuant to a District Steam Agreement, of such minimum Billing Period charge agreed to by such Customer and Company.

8. SECURITY REQUIREMENTS

If Company has reasonable grounds for insecurity regarding any existing or prospective Customer's performance of any obligation (whether or not then due), including, without limitation, the occurrence of a material change in creditworthiness, Company shall have the right to require that Customer provide adequate assurance of performance and provide sufficient security in the form, amount and for the term reasonably acceptable to Company, including but not limited to a cash security deposit, a standby irrevocable letter of credit, a prepayment, a security interest in an asset or a performance bond or guaranty. In the event that Company agrees to accept a cash security deposit, interest at not less than three percent (3.00%) per annum shall be allowed and paid to Customer while it is held by Company, provided it remain on deposit for six (6) consecutive months. The Company may retain any deposit (net of interest to be paid to the Customer) and apply the same upon bills for service or any indebtedness due to Company by the Customer.

9. REDISTRIBUTION OF STEAM

District Steam Service is furnished for the sole use of the Customer, who shall not redistribute any of such steam to any other person or entity, or permit any other person or entity to use the same, without the express written approval of the Company. The following general standards shall govern the granting of such approval:

(a) Unless waived by Company, any request for approval shall be in writing.
(b) Redistribution shall not be permitted under any circumstances to any premises not owned, leased or otherwise controlled by the Customer.
(c) Redistribution may be permitted where, at the sole discretion of the Company, it is incidental to the business conducted by the Customer and is not otherwise prohibited.
(d) Redistribution shall not be permitted with respect to aggregations of separate commercial or retail users such as those commonly known as shopping centers.
(e) Notwithstanding the above standards, the Company may approve redistribution by the Customer on the basis of circumstances and conditions specific to the Customer's operations and business.
(f) Any approval for redistribution granted by the Company shall be subject to the agreement by the user to whom steam is redistributed to be bound by the terms and conditions of the Customer's District Steam Agreement or Sections 18 and 19 hereof, as applicable.

RULES AND REGULATIONS (CONT.)

10. TERMINATION OF DISTRICT STEAM SERVICE

The Company may cancel, terminate, discontinue or suspend District Steam Service to any Customer for any of the following reasons:

(a) (i) The Customer's violation or failure to comply with the terms and conditions of the Customer's District Steam Agreement or Sections 18 and 19 hereof, as applicable, and/or the general service rules and regulations on file with the PUCO which apply to Customer's service, including, but not limited to, the failure to timely pay any indebtedness owed to Company, the willful or intentional destruction, cutting, breaking, adjustment, tampering or interference with, or unauthorized use of Company's lines or equipment, damage to Company's facilities or equipment caused by Customer, its employees or agents (as contemplated by Sections 4933.18 and 4933.23, Revised Code), or where, because of the action or inaction of Customer, its tenants, employees or agents, the supplying of steam to Customer will create a dangerous or unsafe condition on Customer's premises or to Company or its other customers; or (ii) the Customer has resorted to any fraudulent or illegal practice in obtaining District Steam Service or is the beneficiary of any fraudulent or illegal practice (as contemplated by Section 4933.18, Revised Code);

(b) Where Customer has canceled its service prior to the stated maturity of its District Steam Agreement or as set forth in Section 18 hereof, in either case pursuant to any right to do so contained in such District Steam Agreement or Section 18;

(c) When Company cannot maintain service through commercially reasonable measures or to enable Company to make, or cause to be made, any necessary repairs or connections to its steam supply or distribution system or mains;

(d) When providing District Steam Service is in conflict or incompatible with any law, rule, regulation or order of the State of Ohio, the federal government or any of their respective agencies having jurisdiction;

(e) When, because of circumstances beyond Customer's or Company's control, supplying steam creates a dangerous or unsafe condition; or

(f) Upon the expiration of Customer's District Steam Agreement.

Upon the cancellation, termination, discontinuance or suspension of District Steam Service to a Customer pursuant to any of the above provisions, such Customer shall be responsible for the timely payment of all applicable cancellation charges and disconnection costs set forth in its District Steam Agreement or Sections 18 and 19 hereof, as applicable.

RULES AND REGULATIONS (CONT.)

11. RECONNECTING SERVICE

A. When District Steam Service has been disconnected for any reason covered by Subsections 10(a) or 10(b) above, a reconnection charge equal to the actual labor and materials cost to reconnect will be required when the former Customer requests reconnection, but Company shall be under no obligation to reconnect any such Customer unless such Customer, prior to any reconnection, has paid all outstanding indebtedness in full to Company and has provided any security required by Company, and in addition, in the event of the applicability of Subsection 10(a)(ii) above, has paid the Company an investigation fee of One Hundred Dollars ($100) plus the actual costs of such investigation (if Company has undertaken an investigation of the matter) plus, further, an amount estimated by the Company to be reasonable compensation for the service fraudulently or illegally obtained and not paid for and for any damage to the property of Company, including any costs to repair such damage or tampering.

B. When District Steam Service has been disconnected pursuant to Subsection 10(b) above, the Company shall not be under any obligation to resume such Service to the same Customer at the same premises until the Customer has made payment, in addition to any amounts due pursuant to Subsection 11A above, of an amount equal to the minimum Billing Period charge (if any) for each Billing Period of the intervening period, but not to exceed twelve (12) Billing Periods.

C. If, at the time when District Steam Service is to be disconnected at Customer's Building pursuant to either Subsection 10(a) or 10(b) above, payment in full of all outstanding balances due from Customer to Company is made to Company's employee, whose original purpose was to disconnect the District Steam Service, then a charge equal to the actual time and expense cost of the employee's service call to the Building to disconnect service shall be assessed on the Customer's next billing. District Steam Service which otherwise would have been disconnected shall remain intact.

12. CUSTOMER'S USE OF SERVICE

Each Customer's use of District Steam Service shall be governed by the terms and conditions set forth in Sections 1 through 17, inclusive, of this Tariff and either its District Steam Agreement or Sections 18 and 19 hereof, as applicable, and by all laws, rules, regulations or orders of the State of Ohio, the federal government, or any of their respective agencies having jurisdiction. While a Customer is receiving District Steam Service, unless otherwise agreed in writing by the Company, the utility steam service provided by Company shall be the sole source of Customer's space heating energy requirements for the Building and the sole source of steam service to the Building and a Customer's failure to adhere to this provision shall be a violation and breach of Customer's District Steam Agreement or Section 18, as applicable. The Customer's installation and connection of any equipment directly to Company's central steam service, and the maintenance thereof, shall be subject at all times to the Company's approval. The Customer shall install and maintain pressure regulating valves on its Building system when so specified by the Company. As applicable, the Customer shall install and maintain condensate meters and traps or flow tubes provided by the Company and shall provide any necessary wiring and energy to supply electrically operated steam metering devices, whether installed initially or to replace previous metering equipment.

RULES AND REGULATIONS (CONT.)

13. CUSTOMER BILLS

Customers shall be billed by Company for service rendered during each Billing Period. Company's invoices shall be based on the rates, charges and fees stated in Customer's District Steam Agreement or in Section 19 hereof, as applicable, as applied to Customer's billing determinants during the Billing Period. Customer shall pay Company's invoice within fifteen (15) days of the invoice date. Any invoice unpaid in full within thirty (30) days of the invoice date shall be deemed late and subject to an additional charge of one and one-half percent (1.5%) per month multiplied by the balance not timely paid.

Company may, at its option, estimate Billing Period invoices. Differences between estimated bills and actual amounts due for the Billing Period(s) subject to estimated invoices shall be reconciled in the first subsequent invoice that is based on actual meter data. In no event shall Company estimate meter readings for more than three (3) consecutive months unless it is unable to read Customer's meter for reasons beyond Company's control.

14. METER INSTALLATION, OPERATION AND TESTING

Company shall install at its expense metering equipment sufficient to measure Customer's usage of steam and to bill and collect for service provided by Company. Such metering equipment shall permit Company to measure and, over time, record steam flow and convert this relationship to Mlbs. Company, at its sole discretion, may elect or agree to provide Customer with one or more Points of Delivery. Unless otherwise specifically agreed by Company, service provided at each Point of Delivery shall be metered and billed separately by Company and paid for by Customer. Company may inspect and maintain its metering and any other equipment located within the Building, as Company may determine to be reasonably necessary. The Company's employees and agents shall have free access at any reasonable time to its equipment on Customer's premises, and may remove its meters and equipment for any purpose. In the event of an emergency, the Company's employees and agents shall have such access at any time. No person, except a duly authorized employee or agent of Company, shall be authorized to alter or interfere with the operation of any Company meter, or its connections, regulators or any other item of plant, facilities or equipment furnished by Company. In the event of an emergency, Customer may operate stop valves and meter stop valves provided that such operation is warranted based on emergency conditions, Customer notifies Company of such operation as quickly as possible, the operation is limited to the duration of the emergency and provided that the emergency does not arise after Company has discontinued or suspended service to Customer.

A meter shall be deemed accurate if it is measuring within three percent (3%), more or less, of actual quantities. When a meter fails to accurately register the quantity of steam consumed or returned, Company will change or repair the meter and invoice Customer for the relevant billing period(s) based on either of the following methods:

a. Estimates of the steam consumed on the basis of past usage during a similar period and under similar conditions; or

b. Estimates of the steam consumed on the basis of usage registered by the new or repaired meter during a subsequent period.

RULES AND REGULATIONS (CONT.)

In the event Customer believes that the meters located within the Building are not operating properly, Customer may request, in writing, a test of the meters, whereupon Company shall conduct a test upon the meters located in the Building. If the results of such test show that the meters have overstated the amount of product used by Customer by at least three percent (3%), then Company shall bear the costs of such test and shall either repair or replace the defective meters at its own expense. In all other cases, Customer shall bear the costs of such test. Company shall make any billing adjustment reasonably necessary as a result of any meter test, whether such adjustment would result in payments by, or credits issued to, Customer.

15. ACCOUNTING

The Company shall keep accurate and satisfactory records and books in accordance with generally accepted accounting principles and the uniform system of accounts showing all costs, payments, rate adjustments, credits and other data.

16. CONTINUITY OF SERVICE AND LIABILITY

A. The Company does not guarantee but will endeavor to furnish a continuous supply of steam and to maintain pressure within reasonable limits.

B. Other than for changes in the rules and regulations regarding the provisions of District Steam Service adopted by the Company or the PUCO, no revision of this Tariff, now or in the future, shall affect any District Steam Agreement in effect on the effective date of this Tariff, each of which shall continue in effect according to its terms and provisions until terminated in accordance with its terms or amended by the parties thereto.

C. The Company shall not be liable for direct or consequential damages which a Customer may sustain due to interruptions in service, variations in pressure, the use of steam apparatus or the presence of the Company's property on a Customer's premises.

17. COMPANY FACILITIES

A. Standard Service. The Company shall, where a Customer's premises abut upon an existing steam main adequate and suitable for such Customer's supply, install (at Customer's expense) and maintain (at Company's expense) one standard steam service from such main to the property line of such Customer, and shall also install and maintain at Company's expense a service valve and meter; provided, however, any Customer wishing to receive steam from a steam main of the Company, directly or indirectly, but whose premises do not abut upon such steam main, may continue to receive steam if such Customer shall construct and maintain piping satisfactory to the Company from its premises to such steam main, or as otherwise may be agreed to by Company.

B. Payment for Changes. Any change of service location or equipment made at the request of a Customer shall be paid for by such Customer.

SERVICE SCHEDULES

18. DEFAULT DISTRICT STEAM SERVICE

A. Applicability. This service shall be applicable to: (i) all Customers whose District Steam Agreements have expired and who have not executed either new District Steam Agreements or extensions of their then current Agreements; and (ii) new Customers who elect not to execute a District Steam Agreement provided for in Section 3 above, whose service needs can be accommodated, in the sole judgment of the Company, without impairing the quality of District Steam Service to Company's other Customers and who pay all costs of connecting their Building to Company's steam mains. In lieu of a Tariff Customer paying such costs of connection in a lump-sum payment prior to Company's commencing to provide service, Company may, in its sole discretion, agree to alternate payment provisions, including but not limited to extended payments by the Tariff Customer or Company agreeing to pay such costs and to amortize them over a period of time not to exceed five (5) years, as described more fully in Paragraph C(vi) below. In the event District Steam Service is discontinued or canceled for any reason prior to the end of any extended payment or amortization period agreed to by Company, the Tariff Customer shall be responsible for paying the balance of any unpaid or unamortized costs as of the date of cancellation of service, as more fully set forth in Subparagraphs C(i) and (ii) below.

B. General Performance Obligations.

(i) Subject to the more specific identification of a Tariff Customer's requirements by such Customer and Company, Company shall obtain for and distribute to the Tariff Customer and the Tariff Customer shall receive from Company's existing distribution system at the Point of Delivery (as determined by such Customer and Company) the total steam and heating requirements of the Building. If applicable, Company may also receive returned condensate from a Tariff Customer's Building pursuant to this Tariff. Company is not obligated to provide uninterrupted service to a Tariff Customer and such Customer's service may be interrupted or discontinued by Company when Company cannot maintain service through commercially reasonable measures. Company shall also provide Tariff Customers with periodic invoices stating the charges such Customers owe Company for service provided pursuant to this Tariff and, notwithstanding any other provision in this Tariff, Company may discontinue District Steam Service to a Tariff Customer in the event that such Customer has not made full payment for any Billing Period invoice within the period specified in Paragraph F(i) below. Company shall furnish, install, own and maintain, at its expense, isolation valves and such metering equipment as it deems appropriate to measure the steam distributed to a Tariff Customer and, if applicable, returned condensate from such Customer.

(ii) Each Tariff Customer shall be responsible for all provisions of Sections 1 through 19 of this Tariff, including all amendments, supplements and replacements of any thereof. Each Tariff Customer shall use commercially reasonable efforts to receive steam from Company's distribution system for the Building, meet the conditions established by Company to receive steam and distribution service from Company and timely pay Company for service provided pursuant to this Tariff. Upon Company's reasonable request and at no cost to Company, a Tariff Customer shall provide adequate space and any interest in real property reasonably suitable to Company on such Customer's premises and within the Building to permit Company to meet its initial and ongoing service obligations under this Tariff or otherwise and shall allow Company reasonable access thereto at all reasonable times or at any time in the event of an emergency. A Tariff Customer shall authorize such Customer's property manager, any Building manager or such other person that may have the ability to do so to permit Company to enter the Building for the purpose of meeting the terms of this Tariff. Each Tariff Customer acknowledges that it is solely responsible for establishing and maintaining such facilities, pumps and other equipment as may be required to Redistribute steam within such Customer's Building and to install and operate such equipment, plant and facilities as may reasonably be necessary to avoid the actions or inactions of such Customer, its tenants and other occupants of the Building from negatively affecting Company's ability to safely and adequately meet the needs of its other Customers. Upon request, a Tariff Customer shall

SERVICE SCHEDULES (CONT.)

furnish Company with information that is sufficient to demonstrate that such Customer has installed plant, facilities, and equipment and implemented operating procedures to avoid imposing pressure-related shocks on Company's distribution system. Beyond such steam Redistribution as a Tariff Customer may need to perform to meet the steam and heating needs within the Building, such Customer shall not Redistribute steam, with or without a charge to the receiving party, for any other purpose without prior written consent of Company. Unless otherwise specifically agreed to by Company, a Tariff Customer shall design, own, construct, install, operate and maintain, at its own expense, piping necessary to receive District Steam Service from Company, and if applicable, return condensate, at the Point of Delivery.

(iii) Each of Company and a Tariff Customer shall, respectively as applicable, design, construct, install, operate and maintain its plant, facilities, equipment and piping in an efficient, safe and reliable manner so that the purpose of this Tariff may be fulfilled. Prior to commencing service under this Tariff and for so long as Company provides District Steam Service to the Building pursuant to this Tariff, Company shall have the right, but not the duty, to inspect, review and approve the connection of a Tariff Customer's equipment and piping to Company's steam distribution system. Company's right of inspection shall in no way impose a duty or liability on Company with respect to the lawful, safe or proper operation of such Customer's equipment and piping. As a condition of receiving District Steam Service from Company in accordance with this Tariff, a Tariff Customer acknowledges and represents to Company that it is not relying upon Company's expertise or knowledge in connection with the design or operation of such Customer's equipment and the Redistribution or use of steam within the Building.

(iv) For so long as Company provides District Steam Service to the Building pursuant to this Tariff, the utility steam service provided by Company shall be the sole source of a Tariff Customer's space heating energy requirements for the Building and the sole source of steam service to the Building.

C. Commencement, Termination and Discontinuance of Service.

(i) Company shall commence providing District Steam Service to a Tariff Customer's Building on the Service Commencement Date. A Tariff Customer may terminate this service by providing Company with written notice at least thirty (30) days prior to the effective date of such termination and by making a lump sum termination charge payment to Company equal to the sum of: (a) any and all costs incurred by Company to and including the date of termination for providing service to the Building; (b) the amount of any unpaid or unamortized balance of any connection costs due to Company pursuant to Section 18A above, provided there is such an unpaid or unamortized balance; and (c) the cost of disconnecting District Steam Service to the Building.

(ii) Company may terminate this service upon fifteen (15) days prior written notice to a Tariff Customer in the event of any default by such Customer of its obligations under this Tariff which default continues for a period of more than fifteen (15) days following a written demand by Company to cure such default. Any cure right that a Tariff Customer may have pursuant to this Subparagraph shall not extend to any default that arises as a result of such Customer's failure to make timely payment. In the event of such termination, a Tariff Customer shall pay to Company a cancellation charge equal to the sum of: (a) any and all costs incurred by Company to and including the date of termination for providing service to the Building; and (b) the amount of any unpaid or unamortized balance of any connection costs due to Company pursuant to Section 18A above, provided there is such an unamortized balance; and (c) the cost of disconnecting District Steam Service to the Building. This cancellation charge shall be in addition to any other damages incurred by Company as a result of such Customer's default, including reasonable attorneys' fees and lost profits, and Company reserves the right to seek such damages from such Customer. In lieu of terminating service upon a default by a Tariff Customer, Company shall have the right, and may elect, in its sole discretion, to discontinue or suspend service to such Customer and the

SERVICE SCHEDULES (CONT.)

Building upon the giving of such notice as may then be required by law (or upon fifteen (15) days prior written notice if no notice is then required by law). In the event that Company suspends or discontinues service pursuant to this Paragraph, Company reserves the right to seek damages from such Customer to compensate Company for all losses, costs, damages and expenses, including reasonable attorneys' fees and lost profits, suffered by Company as a result of such Customer's default.

(iii) In the event of any suspension, discontinuance or cancellation of service, Company shall discontinue providing steam and distribution services, and the Tariff Customer shall provide Company with such access to such Customer's Building and property as Company may reasonably request to remove Company's plant, equipment, facilities and piping, if any. A tariff Customer's obligation to provide Company with such access for the purpose of removing such equipment and piping shall survive the termination of service for so long as Company may reasonably require to remove such equipment and piping.

(iv) All obligations of a Tariff Customer that arose prior to the cancellation, suspension or discontinuance of service, including, without limitation, the obligation to pay in full any cancellation charge and any unpaid invoices plus late charges for service provided by Company prior to cancellation, suspension or discontinuance, shall survive the cancellation, suspension or discontinuance. No eminent domain or condemnation proceedings with respect to the Building's premises shall relieve a Tariff Customer of its obligations hereunder.

(v) If at any time a local regulatory authority, other regulatory authority, or Company judges that a Tariff Customer's plant or equipment may be unsafe, Company may withhold or discontinue service until such Customer has completed corrective actions and the actual or potential unsafe condition has been eliminated. Except in the case of an emergency, Company will attempt to provide such Customer with reasonable notice prior to discontinuing or suspending service due to an unsafe condition.

(vi) In accordance with Subparagraphs C(i) and (ii) above, a Tariff Customer is obligated to pay to Company certain rates and charges upon cancellation, termination or discontinuance of District Steam Service, including the balance of any unamortized connection costs. The formula that shall apply for purposes of determining the method of amortization and the resulting balance at any given time for calculation of the balance such Customer shall pay upon cancellation or discontinuance of service is specified in this Subparagraph. In the event that the Company agrees to pay the costs of connecting a Tariff Customer to Company's system, upon Company's final determination of the actual connection costs, Company shall provide the Tariff Customer with written notice of such actual connection costs, together with a schedule showing the amortization. The actual costs shall be amortized on a straight-line, level principal basis at an interest rate of twelve percent (12%) per annum applied to the unamortized balance, with each year's amortization amount prorated in twelve (12) equal monthly installments. FOR ILLUSTRATION PURPOSES ONLY, below is an example of a 5 year amortization schedule that assumes an actual connection cost of $85,000.

SERVICE SCHEDULES (CONT.)

SAMPLE AMORTIZATION SCHEDULE
(Beginning Principal: $85,000)

End of Year	Annual Principal	Annual Interest	Annual Total	Remaining Balance
1	$17,000	$10,200	$27,200	$68,000
2	$17,000	$8,160	$25,160	$51,000
3	$17,000	$6,120	$23,120	$34,000
4	$17,000	$4,080	$21,080	$17,000
5	$17,000	$2,040	$19,040	$0

(vii) When District Steam Service has been disconnected for any reason covered by Subparagraphs C(i) or (ii) above, a reconnection charge equal to the actual labor and materials cost to reconnect will be required when the former Tariff Customer requests reconnection, but Company shall be under no obligation to reconnect any such Customer unless such Customer, prior to any reconnection, has paid all outstanding indebtedness in full to Company and has provided any security required by Company and, in addition, in the event of the applicability of Subparagraph 10(a)(ii) of this Tariff, has paid the Company an investigation fee of One Hundred Dollars ($100) plus the actual costs of such investigation (if Company has undertaken an investigation of the matter) plus, further, an amount estimated by the Company to be reasonable compensation for the service fraudulently or illegally obtained and not paid for and for any damage to the property of Company, including any costs to repair any damage or tampering.

(viii) When District Steam Service has been disconnected pursuant to Subparagraph C(i) above, the Company shall not be under any obligation to resume such Service to the same Tariff Customer at the same premises until such Customer has made payment, in addition to any amounts due pursuant to Subparagraph C(vi) above, of an amount equal to the minimum Billing Period charge (if any) for each Billing Period of the intervening period, but not to exceed twelve (12) Billing Periods.

D. Installation of Equipment.

(i) Company shall design, locate, own, construct and install, at its own expense, all equipment and piping (other than such equipment and piping required to be paid for by a Tariff Customer pursuant to Paragraph 18A above) necessary for a Tariff Customer to receive steam from Company at the Point of Delivery in such amounts as may be reasonably required to meet such Customer's heating needs as specified herein. In order to assist Company with steam acquisition and distribution capacity planning efforts, a Tariff Customer shall notify Company of any anticipated changes in such Customer's estimated usage of District Steam Service promptly at such time and from time to time as such estimated usage is anticipated to change. By accepting service under this Tariff, a Tariff Customer acknowledges that failure to provide Company with information identifying anticipated changes in such Customer's estimated usage may negatively affect Company's ability to timely obtain and distribute sufficient steam to meet such Customer's needs.

(ii) If the Point of Delivery is located within the Building or other structure, then a Tariff Customer shall provide Company with suitable pipe penetrations through the Building's or structure's wall or foundation or other improvements to provide for suitable space for the installation and maintenance of Company's piping, metering and other plant, facilities or equipment associated with the provision of service to such Customer. However, upon a Tariff Customer's request, Company may elect, in its sole discretion, to install, on behalf of such Customer, such pipe penetrations or other improvements for such Customer, provided that such Customer's request for Company to act in such capacity on behalf of such Customer shall obligate such Customer to hold Company harmless from any claim or liability arising from Company's actions and provided that such Customer first properly executes and delivers to Company a

SERVICE SCHEDULES (CONT.)

form of release as specified by Company, the terms and provisions of which, if and when executed and delivered, shall automatically be incorporated into this Tariff as applicable to such Customer. Any costs incurred by Company in undertaking such installation shall be subject to repayment by Customer upon such terms as shall be mutually agreed to by Company and such Customer and be subject to the provisions of Subparagraph E(v) below.

E. Rates, Charges and Billing.

(i) Rates. The Rate Schedule for Tariff Customers receiving District Steam Service pursuant to this Section 18 of the Tariff is set out in Section 19 below. Tariff Customers shall be billed by Company for each Billing Period in which service is provided. Company's invoices shall be based on the rates, charges and fees stated herein as applied to each Tariff Customer's billing determinants during the Billing Period. A Tariff Customer shall pay Company's invoice within fifteen (15) days of the invoice date. Any invoice unpaid in full within thirty (30) days of the invoice date shall be deemed late and subject to an additional charge of one and one-half percent (1.5%) per month multiplied by the balance not timely paid. Company's invoice for service supplied to Tariff Customers pursuant to this Tariff shall include the following:

(a) *Consumption Rate.* The *Consumption Rate* shall be the rate charged to such Customer for its metered consumption of steam for each Billing Period as set forth in Section 19 hereof and shall be multiplied by the total number of Mlbs of steam distributed to such Customer by Company during the Billing Period.

(b) *Purchased Steam Cost Recovery Charge.* The *Purchased Steam Cost Recovery Charge* shall recover the dollar-for-dollar delivered cost of the steam which Company purchases to meet a Tariff Customer's steam requirements at the Point of Delivery. The Purchased Steam Cost Recovery Charge shall be adjusted and reconciled periodically based on such delivered cost in accordance with the formula specified in Section 19 and multiplied, as adjusted on a bills rendered basis, to the total number of Mlbs of steam distributed to such Customer by Company during each Billing Period. The difference between the Purchased Steam Cost Recovery Charge revenues obtained by the Company and the Company's delivered cost of steam shall be ascertained by the Company and filed monthly in a docket designated by the Commission.

(c) *GRT Charge.* The total amount of all rates and charges shown on each Billing Period invoice shall be adjusted upwards by a *GRT Charge* specified in Section 19. The value of the GRT Charge shall be specified as a percentage calculated so as to permit the billing and collection of incremental revenue sufficient for Company to recover the amount of any gross receipts, sales or other charges to which Company may, from time to time, be subject under the laws and regulations of the State of Ohio or other taxing authority, excluding taxes imposed on net income by federal, state and other taxing authorities. Company shall have the right to amend the GRT Charge from time to time to account for changes in the taxes imposed by the applicable taxing authorities.

(d) *Regulatory Recovery Charge.* In the event that Company incurs any cost or charge as described in Paragraph D below, the prorated amount determined in accordance with such Paragraph shall be included on each Customer's invoice for each Billing Period as a *Regulatory Recovery Charge.*

(e) *Late Charge.* Company shall render invoices to each Customer for service for each Billing Period and such invoices shall be due and payable when issued by Company. The *Late Charge* shall be equal to the monthly interest rate specified above times the balance not timely paid.

SERVICE SCHEDULES (CONT.)

(ii) *Metering and Billing.* Company shall install metering equipment sufficient to measure a Tariff Customer's usage of steam and to bill and collect for service provided by Company pursuant to this Tariff. Such metering equipment shall permit Company to measure and, over time, record steam flow and convert this relationship to Mlbs. No person, except a duly authorized employee or agent of Company, shall be authorized to alter, tamper or interfere with the operation of any Company meter, or its connections, regulators or any other item of plant, facilities or equipment furnished by Company. In the event of an emergency, a Tariff Customer may operate stop valves and meter stop valves provided that such operation is warranted based on emergency conditions, such Customer notifies Company of such operation as quickly as possible, the operation is limited to the duration of the emergency and provided that the emergency does not arise after Company has discontinued or suspended service to Customer.

(a) A meter shall be deemed accurate if it is measuring within three percent (3%), more or less, of actual quantities. When a meter fails to accurately register the quantity of steam consumed or returned, Company will change or repair the meter and invoice the Tariff Customer for the relevant Billing Period(s) based on either of the following methods:

(A) Estimates of the steam consumed on the basis of past usage during a similar period and under similar conditions; or

(B) Estimates of the steam consumed on the basis of usage registered by the new or repaired meter during a subsequent period.

(b) Company may inspect and maintain its metering equipment located within the Building, as Company may determine to be reasonably necessary. In the event a Tariff Customer believes that the meters located within its Building are not operating properly, such Customer may request, in writing, a test of the meters whereupon Company shall conduct a test upon the meters located in the Building. If the results of such test show that the meters have overstated the amount of product used by such Customer by at least three percent (3%), then Company shall bear the costs of such test and shall either repair or replace the defective meters at its own expense. In all other cases, such Customer shall bear the costs of such test. Each Tariff Customer and Company agree to negotiate in good faith the amount of any billing adjustment, if any, made by Company as a result of any meter test, whether such adjustment would result in payments by, or credits issued to, such Customer.

(c) Company may, at its option, estimate Billing Period invoices. Differences between estimated bills and actual amounts due for the Billing Period(s) subject to estimated invoices shall be reconciled in the first subsequent invoice that is based on actual meter data. In no event shall Company estimate meter readings for more than three (3) consecutive months unless it is unable to read a Tariff Customer's meter for reasons beyond Company's control.

(d) Upon request by a Tariff Customer, Company may, in its discretion, provide such Customer with one or more additional Points of Delivery. Unless otherwise specifically agreed by Company, service provided to each Point of Delivery shall be separately metered and billed by Company and paid for by such Customer.

(iii) *Other Charges.* In the event that any tax, fee, levy, surcharge, assessment, imposition or similar charge (other than a gross receipts tax or other charge included in the GRT Charge set forth above) is imposed or assessed by any taxing authority on Company or a Customer (but only to the extent that such charge is required to be collected by Company from the Customer and remitted to such taxing authority), which tax or other charge is identifiable to, or measured by a Customer's use, consumption, invoice, or purchase of products or services supplied or distributed by Company to a Customer (or the sale thereof by Company to a Customer), the Customer's rates and charges established in Section 19

SERVICE SCHEDULES (CONT.)

shall be increased by an amount equal to the amount necessary for Company to recover such charge(s) imposed or assessed on Company or which Company is required to collect. In the event that Company is required to collect any such charge or imposition imposed on a Customer, Company shall have no obligation at any time to reimburse such Customer for any such amount collected or any portion thereof.

(iv) *Governmental Authority or Insurance Company Mandated Changes or Modifications.* Changes or modifications as mandated, from time to time, by any governmental authority or insurance company and required for Company to obtain or distribute steam for its Customers' needs are not a part of the Rate Schedule set forth in Section 19. In the event that Company must incur financial costs for compliance with such requirements, a prorated amount of the total expense from time to time outstanding will be applied by Company to each Mlbs of steam sold to Customers over a reasonable period so as to permit Company to recover the cost thereof.

(v) *Mutually Agreed Charges.* Upon the mutual agreement of a Tariff Customer and Company, Company may elect to provide assistance to such Customer in installing equipment and/or improvements to the Building related to the use of Company's products or service or the commencement of service to the Building. The type and amount of such assistance to be provided by Company, and the manner of repayment of such costs by Customer, if any, shall be set forth in a schedule (*Schedule*) mutually agreed to by the parties. In the event that Company shall provide such assistance, such Customer shall cooperate with Company and execute any instruments, certificates and other documents reasonably requested by Company in connection with providing such assistance, including but not limited to, any consents to assignment by Company of the obligation of such Customer under this Tariff or any part hereof, or of any revenues hereunder, including any amounts to be paid by such Customer pursuant to the Schedule, to any lender providing funds to Company for such assistance or other party.

F. Conditions to Receive and Maintain Service and Changes in Conditions.

(i) A Tariff Customer's rights and Company's obligations under this Tariff are contingent on such Customer satisfying the Conditions to Receive Steam Distribution Service (hereinafter, *Conditions*) set forth below in Subparagraph F(ii). Each Tariff Customer agrees that Company may, with written notice to such Customer change the Conditions to the extent that Company reasonably determines that such changes are necessary for proper, efficient, and safe operation of Company's system, provided that such changes shall have effect on a prospective basis commencing thirty (30) days following the date of Company's written notice. All such changes shall, to the extent practicable, be applied uniformly and shall, on their effective date, automatically become effective without need for regulatory approval.

(ii) Company shall use its best efforts to obtain and distribute steam to each Customer at sufficient pressure for each Customer's needs. Company shall use commercially reasonable efforts to provide each Customer with continuous steam distribution service, subject among other things, to the following Conditions:

(a) Each Customer shall give immediate notice to Company of any leakage or escape of steam.

(b) All repairs to or replacements of any Customer's piping and equipment shall be made promptly by the Customer at Customer's expense and shall not interfere with Company's ability to meet the service needs of its other Customers.

(c) Each Customer shall provide Company's duly authorized representatives with access at all reasonable times and to all of Company's property on the premises of the Customer and on all other premises which Customer may own or control for the purposes of meeting Company's service responsibilities to Customer and its other Customers.

SERVICE SCHEDULES (CONT.)

Company shall attempt to provide a Customer with reasonable notice prior to accessing such property provided that the access sought by Company is not related to an existing or impending emergency condition.

(d) On or prior to the Service Commencement Date, Company shall furnish shut-off valves and cathodic protection isolation flanges when, in Company's judgment, such equipment is needed to efficiently and safely meet a Customer's service needs. Company shall also furnish the meter flow element, the meter proper and the necessary electronics and recorders and each Customer shall properly install such items. Each Customer shall provide to Company, at Customer's expense and at a location or locations Company determines to be suitable, 120-volt, 60-cycle, single-phase and reliable electricity supply. Each Customer shall also provide to Company, at Customer's expense and at a location or locations Company determines to be suitable, secure land phone line, Ethernet, LAN, cable or WAN access communications capability suitable to meet Company's metering, monitoring and data collection needs.

(e) Each Customer shall provide the temperature control indicated for the control valves in accordance with Company's specifications.

G. Miscellaneous.

(i) Company shall use all commercially reasonable efforts to secure and maintain all necessary permits, easements, ordinances, franchises, licenses and approvals over private and public property and any other approvals that may be required to operate its distribution system. Company and each Tariff Customer agree that all obligations of Company to perform under this Tariff are contingent upon and subject to securing and maintaining all such permits, easements, ordinances, franchises, licenses and approvals. Each Tariff Customer agrees to assist and cooperate with Company, and further agrees to permit the installation, operation, maintenance and replacement of service lines and valve pits within and on such Customer's property or within the Building, and hereby grants to Company, at no cost to Company, the right to access and use such property and Building for the purpose of performing the actions required or permitted by this Tariff. Company shall provide advance notice and coordinate the installation of such service lines and valve pits with each Tariff Customer.

(ii) Except with regard to a Tariff Customer's obligation to make payment(s) due pursuant to this Tariff, neither party shall be liable to the other for failure to perform an obligation to the extent such failure was caused by *Force Majeure*. The term *Force Majeure* as employed herein means any cause not reasonably within the control of the party claiming the suspension as further defined herein. Force Majeure shall include, but not limited to the following: (1) physical events such as acts of God, landslides, lightning, earthquakes, fires, storms or storm warnings, such as hurricanes or tornadoes, which result in evacuation of the affected area, floods, washouts, explosions, breakage or accident or necessity of repairs to machinery, plant or equipment or lines or pipe; (2) weather related events affecting an entire geographic region, such as low temperatures which cause freezing of lines or pipes; (3) interruption or curtailment of steam supply to Company's distribution system; (3) acts of others such as strikes, lockouts, or other industrial disturbances, riots, sabotage, insurrections or wars; and (4) governmental action such as the necessity for compliance with any court order, law, statute, ordinance, regulation or policy having the effect of law promulgated by a governmental authority having jurisdiction. Each Tariff Customer and Company shall make reasonable efforts to avoid the adverse impacts of a Force Majeure and to resolve the event or occurrence once it has occurred in order to resume performance. Notwithstanding anything to the contrary herein, the settlement of strikes, lockouts or other industrial disturbances shall be within the sole discretion of the party experiencing such disturbance. The party whose performance is prevented by Force Majeure must provide prompt and reasonable notice to the other party. Initial notice may be given orally; however, written notice with reasonably full particulars of the event or occurrence is

SERVICE SCHEDULES (CONT.)

required as soon as reasonably possible. Upon providing written notice of Force Majeure to the other party, the affected party will be relieved of its obligation, from the onset of the Force Majeure event and to the extent and duration of Force Majeure.

(iii) No waiver of breach of this Tariff shall be held to be a waiver of any other or subsequent breach. Each remedy available to a non-defaulting party shall be cumulative and in addition to any other remedy provided by law or in equity. The failure of either party to insist on strict performance of any provision under this Tariff, or to take advantage of any right hereunder, shall not be construed as a waiver of such provision or right. No single or partial exercise of any right, power or privilege shall preclude any other or future exercise thereof or the exercise of any other right, power or privilege. Any suspension or waiver of a default or other provision under this Tariff shall not suspend, waive or affect any other default or other provision under this Tariff, and shall not be construed as a bar to any right or remedy that a party would otherwise have had on any future occasion.

(iv) Any claim or dispute involving a Tariff Customer shall be resolved in accordance with such process and procedures as permitted by applicable laws and regulations.

(v) If Company has reasonable grounds for insecurity regarding a Tariff Customer's performance of any obligation under this Tariff (whether or not then due), including, without limitation, the occurrence of a material change in creditworthiness, Company shall have the right to require that Customer provide adequate assurance of performance and provide sufficient security in the form, amount and for the term reasonably acceptable to Company, including but not limited to a cash security deposit, a standby irrevocable letter of credit, a prepayment, a security interest in an asset or a performance bond or guaranty.

(vi) Company shall not be liable for any loss, damage, expense (including reasonable attorney's fees), or claim for personal injury, death, property damage, or otherwise arising from Company's distribution of steam to the Point of Delivery pursuant to this Tariff unless such loss, damage, expense or claim is determined to be the direct result of Company's violation of its public utility obligations as determined in a final determination by the PUCO. Each Tariff Customer agrees to indemnify and hold Company harmless against any loss, damage, expense (including reasonable attorney's fees), or claim for personal injury, death, property damage, or otherwise arising from such Customer's receipt of steam at the Point of Delivery, such Customer's utilization of such steam and that Customer's return of water to Company's distribution system pursuant to this Tariff, to the extent such loss, damage, expense or claim is caused by negligence of such Customer, its employees, agents or tenants.

SERVICE SCHEDULES (CONT.)

19. RATE SCHEDULE FOR DEFAULT DISTRICT STEAM SERVICE

A. Consumption Rate. The *Consumption Rate* described in the foregoing Section 18 shall be set at one and ten hundredths (1.10) times the authorized block rates contained in the Standard Contract. For the calendar year 2012, the Consumption Rate (applying the 1.10 multiplier) for Tariff Customers receiving District Steam Service shall be as set forth in the Monthly Consumption Rate Charge schedule below. Any charge specified below as having a zero value shall not apply. Any charge otherwise identified below or resulting from the foregoing Section 18 shall be in addition to the Consumption Rate Charge. If and when a change in the rate for Customers under Standard Contracts is authorized by the PUCO, all Tariff Customers shall be notified and the revised rates (at 1.10 times the new Standard Contract rates shall become effective for all Tariff Customers. Pursuant to Section 4905.31, Revised Code, when the PUCO authorizes a change to the Standard Contract rates, the Company shall file a revised Section 19 of this Tariff which will supersede this current Section and will conform the base rates to the level established by applying the process set forth above.

MONTHLY CONSUMPTION RATE CHARGE PER MLBS OF STEAM

The first 500 Mlbs	$13.20
The next 500 Mlbs	$10.45
The next 2,000 Mlbs	$ 9.35
The next 2,000 Mlbs	$ 8.25
All over 5,000 Mlbs	$ 5.50

From and after January 1, 2013 the Consumption Rate per Mlbs of steam set forth above shall be increased on each January 1 by a percentage equal to the greater of the Consumer Price Index-All Urban Consumers (*CPI-AUC*) published by the United States Bureau of Labor Statistics for the immediately preceding calendar year (or its equivalent, as determined in the sole discretion of the Company, if such CPI-AUC is no longer published) or 3.00%.

B. Purchased Steam Cost Recovery Charge.

Base Charge: $14.61 per Mlbs consumed.

The Base Charge specified shall be adjusted up or down at least quarterly by Company to recover the delivered cost of steam purchased by Company to meet the steam needs of each Customer at the Point of Delivery and reconciled on Customers' Billing Period invoices over not less than three (3) Billing Periods to avoid abrupt adjustments and substantial swings or volatility in Customers' invoices but to ensure that the revenues obtained by Company match the Company's delivered cost of purchased steam. Company shall forecast its actual delivered cost of purchased steam on at least a quarterly basis, net of any prior period over or under recovery, and the Mlbs subject to the Purchased Steam Cost Recovery Charge and compute a new quarterly (or other period not to exceed a quarter) Purchased Steam Cost Recovery Charge based on such forecasts. The new Purchased Steam Cost Recovery Charge shall be computed by dividing the forecasted Mlbs subject to such Charge into the forecasted period's delivered cost of purchased steam net of any prior period over or under recovery. The Base Charge specified above shall be adjusted up or down for the forecasted period by the positive or negative difference between each newly computed Purchased Steam Cost Recovery Charge. Company shall notify each Customer of the as adjusted Purchased Steam Cost Recovery Charge thirty (30) days prior to the effective date of such Charge. Should events or circumstances (for example, significant market volatility in fuel costs or extreme weather conditions) indicate to Company that actual purchased steam costs or actual Mlbs subject to said Charge may be substantially different than the amounts forecasted, Company may adjust the Base Charge more frequently than quarterly.

SERVICE SCHEDULES (CONT.)

C. Late Charge.

Each Customer shall pay each invoice rendered by Company within fifteen (15) days of the date of the invoice. Any invoice unpaid in full by the thirtieth (30th) day after the invoice date shall be deemed late and subject to an additional charge of one and one-half percent (1.5%) per month multiplied by the balance not timely paid.

D. GRT Charge.

The total amount of all rates and charges shown on the invoice from Company to each Customer for each Billing Period shall be adjusted upward by .04986 (4.986 percent) to reflect the currently applicable taxes and other charges included in the GRT Charge as of the effective date of this Tariff to compute each total Billing Period invoice.

20. SCHEDULE OF INCORPORATED RATE-RELATED PROVISIONS

This schedule incorporates: (1) the fuel adjustment rider schedule included as Original Sheet 16 in Company's P.U.C.O. No. 1 tariff ("prior tariff"); and (2) the base rate for steam heating service included as paragraph 6 of the standard contract attached as Appendix "A" to the prior tariff. The provisions hereby incorporated shall remain applicable only for those district steam agreements in effect on the effective date of this tariff which reference or incorporate any portion of either of such provisions and shall automatically lapse and become void and be of no effect when such district steam agreements either shall have been terminated in accordance with their terms or shall have been amended by the mutual agreement of the Company and a Customer to provide that the provisions of such agreements referencing or incorporating any portion of these provisions shall have been terminated.

A. Fuel Adjustment Rider.

The weighted average cost of fuel burned for central steam service for each month shall be ascertained by the Company and filed monthly with the PUCO. The rates in each of the Company's steam schedules in which this Schedule is applicable shall be increased for such month by $0.00225 per 1,000 pounds of steam for each full 0.10 of the cost of fuel per million Btu.

The weighted average cost of fuel as used in the above shall include all direct costs incurred by the Company to place fuel, at the point of burning in the boilers at plants in which steam is generated for sale under this Tariff.

B. Base Rate for Steam Heating Service.

The Base Rate for Steam Heating Service shall be the Standard steam heating service rate, a sample of which is below:

SERVICE SCHEDULES (CONT.)

RATES PER MLB. OF STEAM

	Effective 4/1/07
The first 250 Mlbs	$11.92
The next 250 Mlbs	10.36
The next 500 Mlbs	9.69
The next 2,000 Mlbs	9.02
The next 2,000 Mlbs	8.02
All excess over 5,000 Mlbs	5.84

The rate per 1,000 lbs. of steam reflected in this paragraph for each of the usage blocks set forth above will be increased on April 1, 2007 by 3%, and on January 1st of each year thereafter; in year two, three and four the increase will be 3%, and in year five 3%, plus 1 ½%, rounded to two decimal places.

Cleveland Thermal, LLC
1921 Hamilton Avenue, Cleveland, OH 44114
Phone: (216) 241-3636
Fax: (216) 241-6486

CLEVELAND THERMAL, LLC
FUEL CHARGE CALCULATION
November 2016

	CANAL COAL USED	20TH OIL USED	20TH GAS USED	STEAM USED	TOTAL
TONS COAL BURNED	3,713				
COST PER TON	$ 124.14				
COST OF COAL BURNED	$460,883				
FUEL HANDLING COSTS TO POINT OF BURN	$41,818				
GALLONS OIL BURNED		0			
COST PER GALLON		$ -			
COST OF OIL BURNED		$0			
MCF GAS BURNED			31,544.9		
COST PER MCF			$ 3.76		
COST OF GAS BURNED			$118,521		
MLBS CONSUMED				0	
COST PER MLB				$ -	
				$0	
AVE. BTU/LB COAL	13,419				
	2,000				
AVE. BTU / FUEL SOURCE	26,838,000	156,345	1,000,000	1,195,000	
FUEL BURNED	3,712.59	-	31,544.90	0	
BTU OF FUEL BURNED	99,638,490,420	0	31,544,900,000	0	
	1,000,000	1,000,000	1,000,000	1,000,000	
MMBTU FUEL BURNED	99,638	0	31,545	0	
COST PER MMBTU	$5.04525	$0.00000	$3.75723	$0.00000	
COST OF FUEL BURNED	$502,700.94	$0.00	$118,521	$ -	$621,222.40
MMBTU BURNED	99,638.49	0.00	31,544.90	0.00	131,183.39
TOTAL COST PER MMBTU					$4.73553
					100.00
CENTS PER MMBTU					$473.5526
					$0.10
					4,736
FUEL ADJ. PER .10 CENTS UNITS					$0.00225
FUEL ADJUSTMENT CHARGE PER MLB					$10.65600
Actual Fuel Charge					$9.0000
Difference					$ 1.65600
Mlbs sold					3,141
Deferred charges					$ 5,201.91
YTD Deferred charge account balances					(12,430)
Total Deferred charges					$ (7,228)

Cleveland Thermal, LLC
1921 Hamilton Avenue, Cleveland, OH 44114
Phone: (216) 241-3636
Fax: (216) 241-6486

CLEVELAND THERMAL STEAM DISTRIBUTION, LLC
Purchased Steam Cost Recovery Revenue Differential
November 2016

	per MLB	Gross $
A. Delivered Purchased Steam Cost for Reporting Month:	$15.00	$701,340.15
B. Revenues Received from Customers - Reporting Month [1]:	$15.00 [2]	$701,340.15 [2]
C. Net Purchased Steam Cost Recovery Revenues:	$0.00	$0.00

	MLBs
D. Monthly Volume billed w/ Fuel Adjustment Rate [3]:	3,141.25
E. Monthly Volume billed w/ Purchased Cost Recovery Rate [3]:	46,756.01
Total Monthly Volume	49,897.26

Notes:
(1) Reflects revenues received (per GAAP accrual) in reporting month.

(2) Rate billed for reporting month - includes over/under reconciliation of charges/credits to customers from prior quarter, if any, in revenues received in reporting month.

(3) For reporting month.

APPENDIX A

STANDARD STEAM SUPPLY AND DISTRIBUTION AGREEMENT

STANDARD
STEAM SUPPLY AND DISTRIBUTION AGREEMENT

BY AND BETWEEN

CLEVELAND THERMAL STEAM DISTRIBUTION, LLC

AND

[ ]
(FOR THE [ ] BUILDING, CLEVELAND, OHIO)

STANDARD
STEAM SUPPLY AND DISTRIBUTION AGREEMENT
TABLE OF CONTENTS

	Page
1. General Performance Obligations	1
2. Term of Agreement and Early Termination	2
3. Installation of Equipment	4
4. Steam Usage	4
5. Rates, Charges and Billing	4
6. Condition to Receive and Maintain Service and Changes in Conditions	7
7. Miscellaneous	7
8. Signature Page	11

Appendices

Appendix A The Building	13
Appendix B Term and Customer Termination	14
Appendix 1 Rate Schedule for Steam Supply and Distribution Service	15
Appendix 2 Conditions to Receive and Maintain Service	17
Appendix 3 Customer Release Pipe Penetrations	18
Appendix 4 Company Provided Building Improvements	19
Appendix 5 Typical Interconnection Diagram	20

Exhibits

Exhibit A Assignor Letter	22
Exhibit B Assignee Letter	24

STANDARD
STEAM SUPPLY AND DISTRIBUTION AGREEMENT

This Standard Steam Supply and Distribution Agreement (hereinafter, the *Agreement*) is entered into as of the1st day of [ ], 20[ ], between [ ], located at [ ] (hereinafter, the *Customer*) and CLEVELAND THERMAL STEAM DISTRIBUTION, LLC, located at 1921 Hamilton Avenue, Cleveland, Ohio 44114 (hereinafter, the *Company*).

WHEREAS, Company is a district energy company engaged in the business of distributing steam and hot water to owners of buildings located in certain areas of the City of Cleveland, Ohio (hereinafter, the *City*) in accordance with reasonable arrangements or tariff schedules (*Tariff*) filed with the Public Utilities Commission of Ohio (hereinafter, *PUCO*); and

WHEREAS, Customer is the owner of a certain building located in the City and desires that Company obtain for and distribute processed steam to Customer to meet Customer's heating and other energy needs.

NOW THEREFORE, in consideration of the mutual promises hereinafter set forth and other good and valuable consideration, the receipt and sufficiency of which are hereby acknowledged, and subject to the terms and provisions hereof, Company and Customer, intending to be legally bound, agree as follows:

1. GENERAL PERFORMANCE OBLIGATIONS

A. Subject to the more specific identification of Customer's requirements set forth herein, Company shall obtain for and distribute to Customer and Customer shall receive from Company's existing distribution system at the *Point of Delivery* (as specified in accordance with this Agreement) the total steam and heating requirements of the building or premises identified on Appendix A attached hereto and incorporated herein by reference (hereinafter, the *Building*). However, this Agreement does not obligate Company to provide uninterrupted service to Customer and Customer acknowledges, by executing this Agreement, that Customer's service may be interrupted or discontinued by Company when Company cannot maintain service through commercially reasonable measures. Company reserves the right, upon reasonable advance notice to Customer, to interrupt the supply of steam to enable Company to make, or cause to be made, any necessary repairs or connections to its steam supply or distribution system or mains. In general, Company intends to give Customer twenty-four (24) hours advance notice but, in the event of an emergency, Company will give Customer as much advance notice as practical. Company shall also provide Customer with periodic invoices stating the charges Customer owes Company for service provided under this Agreement and, notwithstanding any other provision in this Agreement, Company may discontinue service under this Agreement in the event that Customer has not made full payment for any Billing Period (as defined below) invoice within the period specified in Paragraph 5.A below. Company shall furnish, install, own and maintain, at its expense, isolation valves and such metering equipment as it deems appropriate to measure the steam distributed to Customer.

B. Customer shall be responsible for all provisions of Sections 1 through 17, inclusive, of Company's Tariff (except to the extent inconsistent with the provisions of this Agreement), including all amendments, supplements and replacements of any thereof, in addition to the terms and conditions of this Agreement. Customer shall pay all costs of connecting the Building to Company's steam mains and shall use commercially reasonable efforts to receive steam from Company's distribution system for the Building, meet the conditions established by Company to receive steam and distribution service from Company and timely pay Company for service provided pursuant to this Agreement. Upon Company's reasonable request and at no cost to Company, Customer shall provide adequate space and any interest in real property reasonably suitable to Company on Customer's property and within the Building to permit Company to meet its initial and ongoing service obligations under this Agreement or otherwise and shall allow

Company reasonable access thereto at all reasonable times or at any time in the event of an emergency. By executing this Agreement, Customer authorizes Customer's property manager, any Building manager or such other person that may have the ability to do so, to permit Company to enter the Building for the purpose of performing this Agreement. By executing this Agreement, Customer acknowledges that it is solely responsible for establishing and maintaining such facilities, pumps and other equipment as may be required to redistribute steam within the Building and to install and operate such equipment, plant and facilities as may reasonably be necessary to avoid the actions or inactions of Customer, its tenants and other occupants of the Building from negatively affecting Company's ability to safely and adequately meet the needs of its other customers. Upon request, Customer shall furnish Company with information that is sufficient to demonstrate that Customer has installed plant, facilities, and equipment and implemented operating procedures to avoid imposing pressure-related shocks on Company's distribution system. Beyond such steam redistribution as Customer may need to perform to meet the steam and heating needs within the Building, Customer shall not redistribute steam, with or without a charge to the receiving party, for any other purpose without prior written consent of Company. Unless otherwise specifically agreed to by Company, Customer shall design, own, construct, install, operate and maintain, at its own expense, piping necessary to receive steam from Company at the Point of Delivery.

C. Each party shall, respectively, design, construct, install, operate and maintain its plant, facilities, equipment and piping in an efficient, safe and reliable manner so that the purpose of this Agreement may be fulfilled. Prior to commencing service under this Agreement and throughout the Term, as defined below, Company shall have the right, but not the duty, to inspect, review and approve the connection of Customer's equipment and piping to Company's steam distribution system. Company's right of inspection shall in no way impose a duty or liability on Company with respect to the lawful, safe or proper operation of Customer's equipment and piping. By executing this Agreement, Customer represents to Company that it is not relying upon Company's expertise or knowledge in connection with the design or operation of Customer's equipment and the redistribution or use of steam within the Building.

D. Throughout the Term, the utility steam service provided by Company shall be the sole source of Customer's space heating energy requirements for the Building and the sole source of steam service to the Building.

2. TERM OF AGREEMENT AND EARLY TERMINATION

A. The initial term of this Agreement (such initial term, together with any extension or renewal thereof, the *Term*) shall commence on the *Service Commencement Date,* which for purposes of this Agreement shall be the date identified in Appendix A attached hereto and incorporated herein by reference, and shall terminate on the initial termination date set forth in Appendix B, attached hereto and incorporated herein by reference, unless sooner terminated pursuant to the provisions hereof.

B. At the end of the initial term, this Agreement shall be renewed or extended as set forth in Appendix B.

C. Customer may cancel or terminate this Agreement prior to the end of the Term only as set forth in Appendix B.

D. Company may terminate this Agreement upon fifteen (15) days prior written notice to Customer in the event of any default by Customer, which default continues for a period of more than fifteen (15) days following a written demand by Company to cure such default. Any cure right that Customer may have pursuant to this Paragraph shall not extend to any default that arises as a result of Customer's failure to make timely payment. In the event of such termination, Customer shall pay to Company a cancellation charge equal to the sum of: (1) eight dollars ($8.00) times the last twelve (12) Billing Periods invoiced steam use measured in 1,000s of

pounds (*Mlbs*), (2) all costs incurred by Company in disconnecting the Building from Company's steam distribution system; and (3) an amount equal to all amounts, if any, due with respect to any unpaid or unamortized costs from the date of termination to the end of the amortization period as shown on any then current Schedule, as defined below, with interest thereon as may be set forth in the Schedule or as otherwise determined by Company. This cancellation charge shall be in addition to any other damages incurred by Company as a result of Customer's default, including reasonable attorneys' fees and lost profits, and Company reserves the right to seek such damages from Customer. In lieu of terminating the Agreement upon a default by Customer, Company shall have the right, and may elect, in its sole discretion, to discontinue or suspend service to Customer and the Building upon the giving of such notice as may then be required by law (or upon fifteen (15) days prior written notice if no notice is then required by law). In the event that Company suspends or discontinues service pursuant to this Paragraph, Company reserves the right to seek damages from Customer to compensate Company for all losses, costs, damages and expenses, including reasonable attorneys' fees and lost profits, suffered by Company as a result of Customer's default.

E. In the event of any suspension or discontinuance of service or cancellation of the Agreement, (i) pursuant to Paragraph D above, or (ii) by Customer pursuant to any right under Appendix B, or (iii) as a result of the end of the Term, Company shall discontinue providing steam and distribution services hereunder, and Customer shall provide Company with such access to Customer's Building and property as Company may reasonably request to remove Company's plant, equipment, facilities and piping, if any. Customer's obligation to provide Company with such access for the purpose of removing such equipment and piping shall survive the termination of this Agreement for so long as Company may reasonably require to remove such equipment and piping. When District Steam Service has been disconnected for any reason covered by Paragraph D above, a reconnection charge of Two Hundred Fifty Dollars ($250.00) plus the actual labor and materials cost to reconnect will be required if the former Customer requests reconnection, but Company shall be under no obligation to reconnect such Customer unless such Customer, prior to any reconnection, has paid all outstanding indebtedness in full to Company and has provided any security required by Company and, in addition, in the event of the applicability of Subparagraph 10(a)(ii) of the Tariff, has paid the Company an investigation fee of One Hundred Dollars ($100) plus the actual costs of such investigation (if Company has undertaken an investigation of the matter) plus, further, an amount estimated by the Company to be reasonable compensation for the service fraudulently or illegally obtained and not paid for and for any damage to the property of Company, including any costs to repair any damage or tampering.

F. By executing this Agreement, Customer assents to Company's receipt, in advance, of any such regulatory authority as Company may need to suspend, discontinue, cancel or terminate service pursuant to this Agreement either at the end of the Term of this Agreement or upon early cancellation.

G. All obligations of Customer that arose prior to the cancellation of this Agreement, including, without limitation, the obligation to pay in full any cancellation charge and any unpaid invoices plus late charges for service provided by Company prior to cancellation, shall survive the cancellation or termination of this Agreement. No eminent domain or condemnation proceedings with respect to the Building's premises shall relieve Customer of its obligations hereunder.

H. By executing this Agreement, Customer acknowledges that Company's service obligations pursuant to this Agreement involve the incurrence of fixed costs associated with long-lived assets and that cancellation charges specified herein are designed to require Customer to provide Company with sufficient revenue upon early termination to approximate Customer's just and reasonable contribution of a return of and return on the capital invested to make service available pursuant to this Agreement. Customer and Company have agreed to the cancellation charges with the understanding that the calculation of the actual fixed costs incurred by Company to meet Customer's service needs is subject to judgment and assumptions, as it is in any

situation involving network utility service and costs incurred to meet the needs in common of multiple customers, and that the method of computing the cancellation charges set forth is this Agreement is appropriate and reasonable.

I. If at any time a local regulatory authority, other regulatory authority, or Company judges that Customer's plant or equipment may be unsafe, Company may withhold or discontinue service until Customer has completed corrective actions and the actual or potential unsafe condition has been eliminated. Except in the case of an emergency, Company will attempt to provide Customer with reasonable notice prior to discontinuing or suspending service due to an unsafe condition.

3. INSTALLATION OF EQUIPMENT

A. Company shall design, locate, own, construct and install, at its own expense, all equipment and piping (except for such equipment and piping required to be paid for by Customer pursuant to Paragraph 2.B above) necessary for Customer to receive steam from Company at the Point of Delivery in such amounts as may be reasonably required to meet Customer's heating needs as specified herein.

B. If the Point of Delivery is located within the Building or other structure, then Customer shall provide Company with suitable pipe penetrations through the Building's or structure's wall or foundation or other improvements to provide for suitable space for the installation and maintenance of Company's piping, metering and other plant, facilities or equipment associated with the provision of service to Customer. However, upon Customer's request, Company may elect, in its sole discretion, to install, on behalf of Customer, such pipe penetrations or other improvements for Customer, provided that Customer's request for Company to act in such capacity on behalf of Customer shall obligate Customer to hold Company harmless from any claim or liability arising from Company's actions and provided that Customer first properly executes and delivers to Company the form of release attached hereto as Appendix 3, the terms and provisions of which, if and when executed and delivered, shall automatically be incorporated into this Agreement. Any costs incurred by Company in undertaking such installation shall be subject to the provisions of Paragraph 5.E below.

4. STEAM USAGE

The initial amount of steam estimated to be needed for Customer's annual use under this Agreement shall be the amount identified in Appendix A attached hereto and incorporated herein (hereinafter, the *Estimated Usage*). In order to assist Company with steam acquisition and distribution capacity planning efforts, Customer shall notify Company of any anticipated changes in Customer's Estimated Usage promptly at such time and from time to time as such Estimated Usage is anticipated to change. By executing this Agreement, Customer acknowledges that failure to provide Company with information identifying anticipated changes in Customer's Estimated Usage may negatively affect Company's ability to timely obtain and distribute sufficient steam to meet Customer's needs.

5. RATES, CHARGES AND BILLING

A. Customer shall be billed by Company on a billing cycle basis (herein, the *Billing Period*) with approximately twelve (12) Billing Periods in each calendar year and each Billing Period approximating one service month. Company's invoices shall be based on the rates, charges and fees stated herein as applied to Customer's billing determinants during the Billing Period. Customer shall pay Company's invoice within fifteen (15) days of the invoice date. Any invoice unpaid in full within thirty (30) days of the invoice date shall be deemed late and subject to an additional charge of one and one-half percent (1.5%) per month multiplied by the balance not timely paid or two dollars ($2.00), whichever is higher. Company's invoice for service supplied to Customer pursuant to this Agreement shall include the following:

(i) *Consumption Rate.* The *Consumption Rate* shall be the rate charged to Customer for its metered consumption of steam for each Billing Period as set forth in Appendix 1 hereto and shall be multiplied by the total number of Mlbs of steam distributed to Customer by Company during the Billing Period.

(ii) *Purchased Steam Cost Recovery Charge.* The *Purchased Steam Cost Recovery Charge* shall recover the dollar-for-dollar delivered cost of the steam which Company purchases to meet Customer's steam requirements at the Point of Delivery. The Purchased Steam Cost Recovery Charge shall be adjusted and reconciled periodically based on such delivered cost in accordance with the formula specified in Appendix 1 and multiplied, as adjusted on a bills rendered basis, to the total number of Mlbs of steam distributed to Customer by Company during each Billing Period.

(iii) *GRT Charge.* The total amount of all rates and charges shown on each Billing Period invoice shall be adjusted upwards by a *GRT Charge* specified in Appendix 1. The value of the GRT Charge shall be specified as a percentage calculated so as to permit the billing and collection of incremental revenue sufficient for Company to recover the amount of any gross receipts, sales or other charges to which Company may, from time to time, be subject under the laws and regulations of the State of Ohio or other taxing authority, excluding taxes imposed on net income by federal, state and other taxing authorities. Company shall have the right to amend the GRT Charge from time to time to account for changes in the taxes imposed by the applicable taxing authorities.

(iv) *Regulatory Recovery Charge.* In the event that Company incurs any cost or charge as described in Paragraph D below, the prorated amount determined in accordance with such Paragraph shall be included on customer's invoice for each Billing Period as a *Regulatory Recovery Charge.*

(v) *Late Charge.* Company shall render invoices to Customer for service for each Billing Period and such invoices shall be due and payable when issued by Company. The *Late Charge* shall be equal to the monthly interest rate specified above times the balance not timely paid or two dollars ($2.00), whichever is higher.

B. *Metering and Billing.* Company shall install metering equipment sufficient to measure Customer's usage of steam and to bill and collect for service provided by Company pursuant to this Agreement. Such metering equipment shall permit Company to measure and, over time, record steam flow and convert this relationship to Mlbs. No person, except a duly authorized employee or agent of Company, shall be authorized herein to alter, tamper or interfere with the operation of any Company meter, or its connections, regulators or any other item of plant, facilities or equipment furnished by Company. In the event of an emergency, Customer may operate stop valves and meter stop valves provided that such operation is warranted based on emergency conditions, Customer notifies Company of such operation as quickly as possible, the operation is limited to the duration of the emergency and provided that the emergency does not arise after Company has discontinued or suspended service to Customer.

(i) A meter shall be deemed accurate if it is measuring within three percent (3%), more or less, of actual quantities. When a meter fails to accurately register the quantity of steam consumed or returned, Company will change or repair the meter and invoice Customer for the relevant Billing Period(s) based on either of the following methods:

a. Estimates of the steam consumed on the basis of past usage during a similar period and under similar conditions; or

b. Estimates of the steam consumed on the basis of usage registered by the new or repaired meter during a subsequent period.

(ii) Company may inspect and maintain its metering equipment located within the Building, as Company may determine to be reasonably necessary. In the event Customer believes that the meters located within the Building are not operating properly, Customer may request, in writing, a test of the meters whereupon Company shall conduct a test upon the meters located in the Building. If the results of such test show that the meters have overstated the amount of product used by Customer by at least three percent (3%), then Company shall bear the costs of such test and shall either repair or replace the defective meters at its own expense. In all other cases, Customer shall bear the costs of such test. Customer and Company agree to negotiate in good faith the amount of any billing adjustment, if any, made by Company as a result of any meter test, whether such adjustment would result in payments by, or credits issued to, Customer.

(iii) Company may, at its option, estimate Billing Period invoices. Differences between estimated bills and actual amounts due for the Billing Period(s) subject to estimated invoices shall be reconciled in the first subsequent invoice that is based on actual meter data. In no event shall Company estimate meter readings for more than three (3) consecutive months unless it is unable to read Customer's meter for reasons beyond Company's control.

(iv) Upon request by Customer, Company may, in its discretion, provide Customer with one or more additional Points of Delivery. Unless otherwise specifically agreed by Company, service provided to each Point of Delivery shall be separately metered and billed separately by Company and paid for by Customer.

C. *Other Charges*. In the event that any tax, fee, levy, surcharge, assessment, imposition or similar charge (other than a gross receipts tax or other charge included in the GRT Charge set forth above) is imposed or assessed by any taxing authority on Company or Customer (but only to the extent that such charge is required to be collected by Company from Customer and remitted to such taxing authority), which tax or other charge is identifiable to, or measured by Customer's use, consumption, invoice, or purchase of products or services supplied or distributed by Company to Customer (or the sale thereof by Company to Customer), the Customer's rates and charges established herein shall be increased by an amount equal to the amount necessary for Company to recover such charge(s) imposed or assessed on Company or which Company is required to collect. In the event that Company is required to collect any such charge or imposition imposed on Customer, Company shall have no obligation at any time to reimburse Customer for any such amount collected or any portion thereof.

D. *Governmental Authority or Insurance Company Mandated Changes or Modifications*. Changes or modifications as mandated, from time to time, by any governmental authority or insurance company and required for Company to obtain or distribute steam for its customers' needs are not a part of this Agreement. In the event that Company must incur financial costs for compliance with such requirements, a prorated amount of the total expense from time to time outstanding will be applied by Company to each Mlbs of steam sold to customers over a reasonable period so as to permit Company to recover the cost thereof.

E. *Mutually Agreed Charges*. Upon the mutual agreement of the parties hereto, Company may elect to provide assistance to Customer in installing equipment and/or improvements to the Building related to the use of Company's products or service or the commencement of service to the Building. The type and amount of such assistance to be provided by Company, and the manner of repayment of such costs by Customer, if any, shall be set forth in a supplemental schedule to Appendix 4 to this Agreement (*Schedule*) mutually agreed to by the parties and attached to this Agreement. In the event that Company shall provide such assistance, Customer shall cooperate with Company and execute any instruments, certificates and other documents reasonably requested by Company in connection with providing such assistance, including but not limited to, any consents to assignment by Company of this Agreement or any part hereof, or

of any revenues hereunder, including any amounts to be paid by Customer pursuant to the Schedule, to any lender providing funds to Company for such assistance or other party.

6. CONDITIONS TO RECEIVE AND MAINTAIN SERVICE AND CHANGES IN CONDITIONS

Customer's rights and Company's obligations under this Agreement are contingent on Customer satisfying the Conditions to Receive Steam Distribution Service (hereinafter, *Conditions*) attached hereto as Appendix 2 and incorporated herein. Customer agrees that Company may, with written notice to Customer change the Conditions to the extent that Company reasonably determines that such changes are necessary for proper, efficient, and safe operation of Company's system, provided that such changes shall have effect on a prospective basis commencing thirty (30) days following the date of Company's written notice. All such changes shall, to the extent practicable, be applied uniformly and shall, on their effective date, automatically become a part of this Agreement without need for Customer and Company to formally execute an amendment or otherwise modify this Agreement.

7. MISCELLANEOUS

A. Company shall use all commercially reasonable efforts to secure and maintain all necessary permits, easements, ordinances, franchises, licenses and approvals over private and public property and any other approvals that may be required to operate its distribution system. Company and Customer agree that all obligations of Company to perform under this Agreement are contingent upon and subject to securing and maintaining all such permits, easements, ordinances, franchises, licenses and approvals; otherwise, unless specifically agreed to by the parties hereto in writing, this Agreement shall terminate and neither party shall have any further obligation hereunder. Customer agrees to assist and cooperate with Company, and further agrees to permit the installation, operation, maintenance and replacement of service lines and valve pits within and on Customer's property or within the Building, and hereby grants to Company, at no cost to Company, the right to access and use such property and Building for the purpose of performing the actions required or permitted by this Agreement. Company shall provide advance notice and coordinate the installation of such service lines and valve pits with Customer.

B. Except with regard to Customer's obligation to make payment(s) due pursuant to this Agreement, neither party shall be liable to the other for failure to perform an obligation to the extent such failure was caused by *Force Majeure*. The term *Force Majeure* as employed herein means any cause not reasonably within the control of the party claiming the suspension as further defined herein. Force Majeure shall include, but not limited to the following: (1) physical events such as acts of God, landslides, lightning, earthquakes, fires, storms or storm warnings, such as hurricanes or tornadoes, which result in evacuation of the affected area, floods, washouts, explosions, breakage or accident or necessity of repairs to machinery, plant or equipment or lines or pipe; (2) weather related events affecting an entire geographic region, such as low temperatures which cause freezing of lines or pipes; (3) interruption or curtailment of steam supply to Company's distribution system; (3) acts of others such as strikes, lockouts, or other industrial disturbances, riots, sabotage, insurrections or wars; and (4) governmental action such as the necessity for compliance with any court order, law, statute, ordinance, regulation or policy having the affect of law promulgated by a governmental authority having jurisdiction. Customer and Company shall make reasonable efforts to avoid the adverse impacts of a Force Majeure and to resolve the event or occurrence once it has occurred in order to resume performance. Notwithstanding anything to the contrary herein, the parties agree that the settlement of strikes, lockouts or other industrial disturbances shall be within the sole discretion of the party experiencing such disturbance. The party whose performance is prevented by Force Majeure must provide prompt and reasonable notice to the other party. Initial notice may be given orally; however, written notice with reasonably full particulars of the event or occurrence is required as soon as reasonably possible. Upon providing written notice of Force Majeure to the other party,

the affected party will be relieved of its obligation, from the onset of the Force Majeure event and to the extent and duration of Force Majeure.

C. This Agreement shall inure to the benefit of and be binding upon the parties' respective successors and assigns; provided, however, that any assignment by Customer of this Agreement or any rights hereunder shall be void and of no effect and Customer shall not be relieved of its obligations and liabilities hereunder, except as set forth in the following sentence. If there occurs any act (by a transfer of assets, stock or other equity interests, long term lease, management or operating agreement, or otherwise) whereby a third party (*Assignee*) acquires the right to control the Building or its operations, Customer may assign this Agreement and be relieved of its obligations and liabilities hereunder for any obligations not having theretofore accrued only if (i) Customer and such Assignee execute, respectively, assignment and assumption agreements substantially in the forms set forth in Exhibits A and B hereto or as otherwise satisfactory to Company in its sole discretion, and (ii) Company approves such assignment and the creditworthiness of such Assignee, which approval shall not be unreasonably withheld or delayed after being given reasonable notice of such assignment and evidence of such creditworthiness. Company may assign this Contract upon giving not less than thirty (30) days prior written notice to Customer of its intent to make such assignment. Except in any instance in which the assignment shall be a collateral assignment in favor of a secured lender, any such assignment shall relieve Company of all its obligations under this Contract provided that Company obtains any such regulatory approvals for such assignment as may be required. Customer agrees that, at any time and from time to time, it will promptly and duly execute and deliver any and all such further instruments and documents and take such further action as Company may reasonably request in writing in order to evidence Customer's acknowledgment of such assignment by Company and to implement the provisions of this Paragraph. This Agreement does not, and shall not be construed as to confer any rights of a third party beneficiary upon any person or entity.

D. Customer and Company agree, upon the written request of the other party, to execute and deliver to the other party, or to such person or entity as may be designated by the other party, a certificate which: (a) identifies this Agreement and any amendments and states that this Agreement as so amended is in full force and effect and has not been further amended as of the date of such certificate; (b) specifies the date through which amounts owing under this Agreement have been paid; and (c) states that, to the best of the knowledge of the party delivering such certificate, neither Company nor Customer are in default of any of its respective obligations under this Agreement (or, if any such default is claimed, identifying the same).

E. This Agreement, including all attachments hereto, sets forth all the understandings, either oral or otherwise, between the parties and any prior understandings, contracts or agreements between the parties are superseded by this Agreement. Except as otherwise specified herein, this Agreement may be amended only by a writing executed by both parties. The headings and subheadings contained in this Agreement are used solely for convenience and do not constitute a part of this Agreement and shall not be used to construe or interpret the provisions of this Agreement.

F. If any provision in this Agreement is deemed to be invalid, void or unenforceable by any court or other tribunal having jurisdiction, such determination shall not invalidate, void, or make unenforceable any other provision of this Agreement and this Agreement shall automatically be modified or reformed to give effect to all remaining provisions hereof.

G. No waiver of breach of this Agreement shall be held to be a waiver of any other or subsequent breach.

H. The interpretation and performance of this Agreement shall be governed by the laws of Ohio excluding, however, any conflict of laws rule which would apply the law of another jurisdiction.

I. Each party to this Agreement represents that it has full and complete authority to enter into and perform this Agreement. Each person who executes this Contract on behalf of either party represents and warrants that he, she or it has full and complete authority to do so and such party will be bound thereby.

J. All notices, demands, requests, reports, invoices and statements provided for in this Agreement shall be made in writing and sent by facsimile or mutually acceptable electronic means, a nationally recognized overnight courier service, hand delivered, or by regular mail addressed as follows:

To Company:	Cleveland Thermal Steam Distribution, LLC 1921 Hamilton Avenue Cleveland, Ohio 44114 Attention: President Fax: 216-241-6486
To Customer:	[ ] [ ] [ ] Attn: [TITLE] Fax:

or to such other address and person as either party may, from time to time, notify the other in writing delivered to the address stated above. Notice will be given when received on a business day by the addressee. In the absence of proof of the actual receipt date, the following presumptions will apply. Notices sent by facsimile or other electronic means shall be deemed to have been received upon the sending party's receipt of its facsimile or other machine's confirmation of successful transmission. If the day on which such facsimile or other electronic transmission is received is not a business day or is after five p.m. on a business day, then the notice shall be deemed to have been received on the next following business day. Notice by overnight mail or courier shall be deemed to have been received on the business day after it was sent or such earlier or later time as is confirmed by the receiving party. Notice via regular mail shall be considered delivered five (5) business days after mailing.

K. Each remedy under this Agreement shall be cumulative and in addition to any other remedy provided by law or in equity. The failure of either party to insist on strict performance of any provision under this Agreement, or to take advantage of any right hereunder, shall not be construed as a waiver of such provision or right. No single or partial exercise of any right, power or privilege hereunder shall preclude any other or future exercise thereof or the exercise of any other right, power or privilege. Any suspension or waiver of a default or other provision under this Agreement shall not suspend, waive or affect any other default or other provision under this Agreement, and shall not be construed as a bar to any right or remedy that a party would otherwise have had on any future occasion.

L. Except as expressly stated herein, Company makes no warranties or representations, express or implied, as to any matter whatsoever related to the interconnection or performance of the district steam system to Customer's Building including the design, capacity, efficiency and operation thereof.

M. Any claim or dispute involving an amount in controversy less than $250,000 that arises out of or related to this Agreement or any breach thereof, shall be resolved by arbitration in accordance with the rules of the American Arbitration Association and judgment upon the award rendered by the arbitrators may be entered in any court having jurisdiction thereof. Any arbitration shall be conducted in Cleveland, Ohio. Reasonable discovery shall be permitted in any such arbitration, subject to the control of the arbitrators, and shall include, but not be limited to, depositions of the parties and production of documents. Claims or disputes involving an amount

in controversy in excess of $250,000 may be resolved by arbitration, but only at the election of the parties at the time of the dispute.

N. If Company has reasonable grounds for insecurity regarding Customer's performance of any obligation under this Agreement (whether or not then due), including, without limitation, the occurrence of a material change in creditworthiness, Company shall have the right to require that Customer provide adequate assurance of performance and provide sufficient security in the form, amount and for the term reasonably acceptable to Company, including but not limited to a cash security deposit, a standby irrevocable letter of credit, a prepayment, a security interest in an asset or a performance bond or guaranty.

O. Company agrees to indemnify and hold Customer harmless against any loss, damage, expense (including reasonable attorney's fees), or claim for personal injury, death, property damage, or otherwise arising from Company's distribution of steam to the Point of Delivery pursuant to this Agreement to the extent such loss, damage, expense or claim is determined to be the direct result of Company's violation of its public utility obligations as determined in a final determination by the PUCO. Customer agrees to indemnify and hold Company harmless against any loss, damage, expense (including reasonable attorney's fees), or claim for personal injury, death, property damage, or otherwise arising from Customer's receipt of steam at the Point of Delivery, Customer's utilization of such steam and Customer's return of water to Company's distribution system pursuant to this Agreement, to the extent such loss, damage, expense or claim is caused by negligence of Customer, its employees, agents or tenants.

P. FOR BREACH OF ANY PROVISION FOR WHICH AN EXPRESS REMEDY OR MEAUSRE OF DAMAGES IS PROVIDED, SUCH EXPRESS REMEDY OR MEASURE OF DAMAGES SHALL BE THE SOLE AND EXCLUSIVE REMEDY. A PARTY'S LIABILITY HEREUNDER SHALL BE LIMITED AS SET FORTH IN SUCH PROVISION, AND ALL OTHER REMEDIES AT LAW OR IN EQUITY ARE WAIVED. IF NO REMEDY OR MEASURE OF DAMAGES IS EXPRESSLY PROVIDED HEREIN, A PARTY'S LIABILITY SHALL BE LIMITED TO DIRECT ACTUAL DAMAGES ONLY. SUCH DIRECT AND ACTUAL DAMAGES SHALL BE THE SOLE AND EXCLUSIVE REMEDY, AND ALL OTHER REMEDIES OR DAMAGES AT LAW OR IN EQUITY ARE WAIVED. UNLESS EXPRESSLY HEREIN PROVIDED, NEITHER PARTY SHALL BE LIABLE FOR CONSEQUENTIAL, INCIDENTAL, PUNITIVE, EXEMPLARY OR INDIRECT DAMAGES OR BUSINESS INTERRUPTION DAMAGES, BY STATUTE, IN TORT OR CONTRACT, UNDER ANY INDEMNITY PROVISION OR OTHERWISE. IT IS THE INTENT TO THE PARTIES THAT THE LIMITATIONS HEREIN IMPOSED ON REMDIES AND THE MEASURE OF DAMAGES IS WITHOUT REGARD TO THE CAUSE OR CAUSES RELATED THERETO, INCLUDING THE NEGLIGENCE OF ANY PARTY, WHETHER SUCH NEGLIGENCE IS SOLE, JOINT OR CONCURRENT, OR ACTIVE OR PASSIVE. TO THE EXTENT THAT ANY DAMAGES REQUIRED TO BE PAID HEREUNDER ARE LIQUIDATED, THE PARTIES ACKNOWLEDGE THAT THE DAMAGES ARE DIFFICULT OR IMPOSSIBLE TO DETERMINE, OR OTHERWISE OBTAINING AN ADEQUATE REMEDY IS INCONVENIENT AND THE DAMAGES CALCULATED HEREUNDER CONSITTUTE A REASONABLE APPROXIMATION OF THE HARM OR LOSS.

[SIGNATURE PAGE FOLLOWS]

IN WITNESS WHEREOF, the parties have executed this Agreement by their duly authorized officers as of the date first above written.

CUSTOMER: [ ]

By: _____
Name:
Title:
Phone: _____
Fax: _____

COMPANY: CLEVELAND THERMAL STEAM DISTRIBUTION, LLC

By: _____
Name: Marc Divis
Title: President
Phone: 216 241-4274
Fax: 216 241-6486

APPENDICES
&
EXHIBITS

APPENDIX A

THE BUILDING

1. Description of the Building:

2. Service Commencement Date:

3. Estimated Usage: [ ] Mlbs/yr

APPENDIX B

TERM AND CUSTOMER TERMINATION

The provisions of this Appendix B supplement the foregoing Agreement and are incorporated therein. Defined terms used in this Appendix but not defined herein shall have the same meanings as set forth in the Agreement, unless the context clearly requires otherwise.

INITIAL TERMINATION DATE

The initial term shall terminate on December 31, 20[ ].

RENEWAL

At the end of the initial term, the Agreement shall automatically renew for [ ] ( ) year period(s), unless either party provides to the other party not less than six (6) months prior written notice to the contrary.

EARLY TERMINATION BY CUSTOMER

Customer may cancel the Agreement at any time by providing the Company with written notice at least twelve (12) months prior to the effective date of such cancellation and by making, no later than fifteen (15) days after the effective date of the termination of the Agreement, a lump sum early cancellation charge payment to Company equal to the sum of: (1) eight dollars ($8.00) times the last twelve (12) months invoiced steam use measured in Mlbs, (2) all costs incurred by Company in disconnecting the Building from Company's steam distribution system; and (3) an amount equal to all amounts, if any, due with respect to unpaid or unamortized costs from the date of termination to the end of the amortization period as shown on any then current Schedule, with interest thereon as may be set forth in the Schedule or as otherwise determined by Company. Such early cancellation charge shall be in addition to the charges for service received by Customer to the date of termination.

APPENDIX 1

RATE SCHEDULE FOR STEAM SUPPLY AND DISTRIBUTION SERVICE

Steam Service. Under the foregoing Agreement the *Consumption Rate* shall be as set forth in the Monthly Consumption Rate Charge schedule below. Any charge specified below as having a zero value shall not apply. Any charge otherwise identified below or resulting from the foregoing Agreement shall be in addition to the Consumption Rate Charge. Defined terms used in this Appendix but not defined herein shall have the meanings set forth in the foregoing Agreement unless the context clearly requires otherwise.

MONTHLY CONSUMPTION RATE CHARGE PER MLBS OF STEAM

The first 500 Mlbs	$12.00
The next 500 Mlbs	$ 9.50
The next 2,000 Mlbs	$ 8.50
The next 2,000 Mlbs	$ 7.50
All over 5,000 Mlbs	$ 5.00

From and after January 1, 2013 the Consumption Rate per Mlbs of steam set forth above shall be increased on each January 1 until the end of the Term by a percentage equal to the greater of the Consumer Price Index-All Urban Consumers (*CPI-AUC*) published by the United States Bureau of Labor Statistics for the immediately preceding calendar year (or its equivalent, as determined in the sole discretion of the Company, if such CPI-AUC is no longer published) or 3.00%.

PURCHASED STEAM COST RECOVERY CHARGE

Base Charge: $14.61 per Mlbs consumed.

The Base Charge specified shall be adjusted up or down at least quarterly by Company to recover the delivered cost of steam purchased by Company to meet the steam needs of Customer at the Point of Delivery and reconciled on Customers' Billing Period invoices over not less than three (3) Billing Periods to avoid abrupt adjustments and substantial swings or volatility in Customers' invoices but to ensure that the revenues obtained by Company match the Company's delivered cost of purchased steam. Company shall forecast its actual delivered cost of purchased steam on at least a quarterly basis, net of any prior period over or under recovery, and the Mlbs subject to the Purchased Steam Cost Recovery Charge and compute a new quarterly (or other period not to exceed a quarter) Purchased Steam Cost Recovery Charge based on such forecasts. The new Purchased Steam Cost Recovery Charge shall be computed by dividing the forecasted Mlbs subject to such Charge into the forecasted period's delivered cost of purchased steam net of any prior period over or under recovery. The Base Charge specified above shall be adjusted up or down for the forecasted period by the positive or negative difference between each newly computed Purchased Steam Cost Recovery Charge. Company shall notify Customer of the as adjusted Purchased Steam Cost Recovery Charge thirty (30) days prior to the effective date of such Charge. Should events or circumstances (for example, significant market volatility in fuel costs or extreme weather conditions) indicate to Company that actual purchased steam costs or actual Mlbs subject to said Charge may be substantially different than the amounts forecasted, Company may adjust the Base Charge more frequently than quarterly.

LATE CHARGE

Customer shall pay each invoice rendered by Company within ten (10) days of the date of the invoice. Any invoice unpaid in full by the thirtieth (30th) day after the invoice date shall be deemed late and subject to an additional charge of one and one-half percent (1.5%) per month multiplied by the balance not timely paid or $2.00, whichever is higher.

GRT CHARGE

The total amount of all rates and charges shown on the invoice from Company to Customer for each Billing Period shall be adjusted upward by .04986 (4.986 percent) to reflect the currently applicable taxes and other charges included in the GRT Charge as of the date of the Agreement to compute the total Billing Period invoice.

APPENDIX 2

CONDITIONS TO RECEIVE AND MAINTAIN SERVICE

As stated in Paragraph 6 of the foregoing Agreement, Customer's rights and Company's obligations under this Agreement are contingent on Customer satisfying the Conditions to Receive Steam Distribution Service (*Conditions*) set forth in this Appendix and incorporated in such Agreement. Customer agrees that Company may, with written notice to Customer change the Conditions to the extent that Company reasonably determines that such changes are necessary for proper, efficient, and safe operation of Company's system, provided that such changes shall have effect on a prospective basis commencing thirty (30) days following the date of Company's written notice. All such changes shall, to the extent practicable, be applied uniformly and shall, on their effective date, automatically become a part of the Agreement without need for Customer and Company to formally execute an amendment or otherwise modify the Agreement.

Company shall use its best efforts to obtain and distribute steam to Customer at sufficient pressure for Customer's needs. Company shall use commercially reasonable efforts to provide Customer with continuous steam distribution service, subject among other things, to the following Conditions:

1. Customer shall give immediate notice to Company of any leakage or escape of steam.

2. All repairs to or replacements of Customer's piping and equipment shall be made promptly by the Customer at Customer's expense and shall not interfere with Company's ability to meet the service needs of its other customers.

3. Customer shall provide Company's duly authorized representatives with access at all reasonable times and to all of Company's property on the premises of Customer and on all other premises which Customer may own or control for the purposes of meeting Company service responsibilities to Customer and its other customers. Company shall attempt to provide Customer with reasonable notice prior to accessing such property provided that the access sought by Company is not related to an existing or impending emergency condition.

4. On or prior to the Service Commencement Date, Company shall furnish shut-off valves and cathodic protection isolation flanges when, in Company's judgment, such equipment is needed to efficiently and safely meets Customer's service needs. Company shall also furnish the meter flow element, the meter proper and the necessary electronics and recorders and Customer shall properly install such items. Customer shall provide to Company, at Customer's expense and at a location or locations Company determines to be suitable, 120-volt, 60-cycle, single-phase and reliable electricity supply. Customer shall also provide to Company, at Customer's expense and at a location or locations Company determines to be suitable, secure land phone line, Ethernet, LAN, cable or WAN access communications capability suitable to meet Company's metering, monitoring and data collection needs.

5. Customer shall provide the temperature control indicated for the control valves in accordance with Company's specifications.

APPENDIX 3

CUSTOMER RELEASE PIPE PENETRATIONS

This CUSTOMER RELEASE PIPE PENETRATIONS (*Release*) is attached to that certain Standard Steam Supply and Distribution Agreement, dated as of the _____ day of _____, 20 ___, (*Agreement*) between Cleveland Thermal Steam Distribution, LLC (*Company*) and _____ (*Customer*) and, when executed by Customer, shall automatically be incorporated into the Agreement. Defined terms used but not defined in this Release shall have the meanings set forth in the Agreement.

By executing this Release, Customer acknowledges and agrees that, pursuant to Paragraph 3.B of the Agreement, it has requested Company to install pipe penetrations through the Building's or structure's wall or foundation or other improvements to provide for suitable space for the installation and maintenance of Company's piping, metering and other plant, facilities or equipment associated with the provision of service to Customer and Company has elected, subject to the execution of this Release by Customer, to install such pipe penetrations.

Customer, for and in consideration of the installation by Company of the wall sleeves for the pipe penetrations in the Building or other improvements and other good and valuable consideration, the receipt and sufficiency of which are hereby acknowledged, does for itself and all of its affiliates and related business entities, and each of their present and former parents, subsidiaries, affiliates, officers, directors, partners, shareholders, employees, agents, representatives, successors and assigns, hereby remises, releases and forever discharges, and covenants not to sue, the Company and anyone acting in concert or participation with it, whether acting individually or otherwise through any other person or entity, and all of their affiliates and related business entities, and each of their present and former parents, subsidiaries, affiliates, officers, directors, partners, shareholders, employees, agents and representatives, successors and assigns, from any and all actions and causes of action, damages, suits, debts, accounts, bonds, contracts, promises, judgments, costs, claims and demands whatsoever, of any nature, kind or description, at law or in equity, which they had, now have or which they or any of them may have in the future, by reason of anything done or omitted by any person or entity, or by reason of any matter, cause, thing or event whatsoever, from the beginning of time, whether known or unknown at the present time, arising out of or in any way relating to or connected with, directly or indirectly, Company's provision of wall sleeves for the pipe penetrations in the Building.

Customer:

By: _____
Name: _____
Title: _____

Date: _____, 20___

APPENDIX 4

COMPANY PROVIDED BUILDING IMPROVEMENTS

In accordance with Paragraph 5.E of the foregoing Agreement between Customer and Company, Company may elect to incur certain costs in connection with the construction and installation of certain improvements to the Building on behalf of Customer, which costs Customer would be obligated to repay to Company, with interest, as mutually agreed by the parties or upon early termination of such Agreement. The purpose of this Appendix is to identify how such costs shall be repaid or amortized for purposes of such repayment, including the determination of any unpaid or unamortized balance of such costs that Customer shall pay Company upon early termination of such Agreement.

The estimated costs to be incurred by Company pursuant to Paragraph 5.E of the foregoing Agreement shall be determined by Company and Company shall provide Customer with written notice of such estimated costs, whereupon Company and Customer shall mutually agree upon the schedule and manner of repayment and applicable interest rate and include such calculation in the Schedule to be attached hereto. If the actual costs of such improvements, as determined upon completion thereof, differ from the initial estimates included in the Schedule, the Schedule shall be modified to reflect such actual costs. Upon any early termination pursuant to Paragraph 2 of the foregoing Agreement, any unpaid and unamortized costs as shown on any then current Schedule as of the effective date of termination shall be due and owing from Customer to Company as part of the cancellation charge set forth in the applicable provision in Paragraph 2.

Notwithstanding anything contained in this Appendix, the Agreement or elsewhere, nothing shall obligate Company to incur any costs pursuant to Paragraph 5.E or this Appendix until the Schedule has been agreed to by Company and Customer and attached hereto.

APPENDIX 5

TYPICAL INTERCONNECTION DIAGRAM

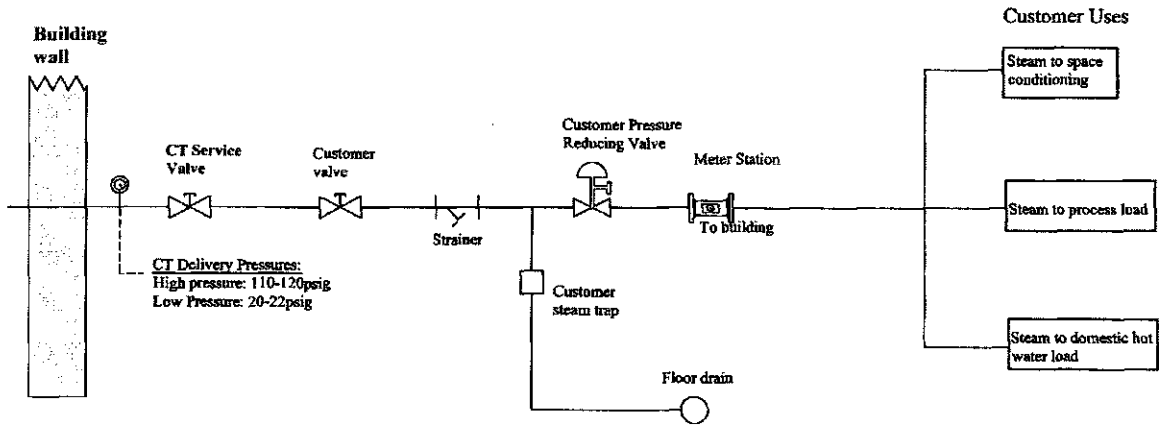

Note:

CT Ownership/Responsibility:

- Piping from building penetration to 1st valve in building. (CT Service Valve)
- Metering station and related components.

Customer Ownership/Responsibility:

- All piping beyond CT Service Valve
- Pressure reducing valves, traps, and heat exchangers.

Cleveland Thermal

Typical Steam Service Connection

Drawn by:	Revision No:	Revision Date
TMC	1	6-15-06

Exhibit A

[Letterhead of Assignor]

[Date]

Cleveland Thermal Steam Distribution, LLC
1921 Hamilton Avenue
Cleveland, Ohio 44114
Attention: President

Re: Assignment of Standard Steam Supply and Distribution Agreement

Ladies and Gentlemen:

Cleveland Thermal Steam Distribution, LLC ("Company") and _____ ("Assignor") entered into a Standard Steam Supply and Distribution Agreement ("Agreement") dated _____, 20___, pursuant to which Company agreed to provide steam utility service to Assignor. Assignor now desires to transfer its right, title, interest and obligations in the Agreement to _____ ("Assignee"), pursuant to the terms and conditions of this Assignment of Standard Steam Supply and Distribution Agreement (this "Assignment").

1. Assignor hereby irrevocably assigns, conveys, transfers and sets over to Assignee all of Assignor's right, title, interest and obligations in and to the Agreement.

2. Assignor represents and warrants to Company as follows: (i) this Assignment has been duly and validly executed and constitutes the legal, valid and binding obligation of each the Assignor and Assignee, enforceable against each of the Assignor and the Assignee in accordance with its terms; (ii) the Agreement remains in full force and effect and is enforceable against Assignor and Assignee; (iii) the execution, delivery, performance and effectiveness of this Assignment shall not operate, nor be deemed to be nor construed as, a waiver of any right, power or remedy of the Company under the Agreement, any term, provision, representation, warranty or covenant contained in the Agreement, or any other documentation executed in connection therewith; (iv) none of the provisions of this Assignment shall constitute, be deemed to be or construed as, a waiver of any event of default under the Agreement; and (v) Assignor and Assignee are in compliance with all of the terms and provisions set forth in the Agreement on their part to be observed or performed, and no event of default specified the Agreement, nor any event which upon notice or lapse of time or both would constitute such an event of default, has occurred and is continuing.

3. The terms, covenants, conditions and warranties herein shall inure to the benefit of and shall be binding upon the parties hereto and their respective successors and assigns; subject, however, to all limitations on further assignment or transfer contained in the Agreement. In the event any provision of this Assignment should be invalid, the validity of the other provisions hereof and of the Agreement shall not be effected thereby. This Assignment shall be governed by and construed in accordance with the laws of the State of Ohio.

ASSIGNOR:

By: _____

Name: _____

Title: _____

Accepted:
Cleveland Thermal Steam Distribution, LLC

By: _____
Name:
Title:
Date:

Exhibit B

[Letterhead of Assignee]

[Date]

Cleveland Thermal Steam Distribution, LLC
1921 Hamilton Avenue
Cleveland, Ohio 44114
Attention: President

Re: Assumption of Standard Steam Supply and Distribution Agreement

Ladies and Gentlemen:

Cleveland Thermal Steam Distribution, LLC ("Company") and _____ ("Assignor") entered into a Standard Steam Supply and Distribution Agreement ("Agreement") dated _____, 20___, pursuant to which Company agreed to provide steam utility service to Assignor. _____ ("Assignee") now desires to assume and comply with all of the terms, provisions, conditions, warranties and covenants contained in the Agreement, pursuant to the terms and conditions of this Assumption of Standard Steam Supply and Distribution Agreement (this "Assumption").

1. Assignee hereby assumes, agrees and covenants with the Assignor and Company to perform and comply with all of the terms, provisions, conditions, warranties and covenants contained in the Agreement, under the terms thereof, as are to be performed and complied with by the Assignor. This Assumption by Assignee is specifically made for the benefit of Company, and from and after the date of the execution of this Assumption. Assignee acknowledges, covenants and agrees that Company may enforce all the terms, conditions and provisions of the Agreement against Assignee to the extent as if Assignee were originally named as the Customer in the Agreement.

2. Assignee represents and warrants to Company as follows: (i) this Assumption has been duly and validly executed and constitutes the legal, valid and binding obligation of each the Assignor and Assignee, enforceable against each of the Assignor and the Assignee in accordance with its terms; (ii) the Agreement remains in full force and effect and is enforceable against Assignor and Assignee; (iii) the execution, delivery, performance and effectiveness of this Assumption shall not operate, nor be deemed to be nor construed as, a waiver of any right, power or remedy of the Company under the Agreement, any term, provision, representation, warranty or covenant contained in the Agreement, or any other documentation executed in connection therewith; (iv) none of the provisions of this Assumption shall constitute, be deemed to be or construed as, a waiver of any event of default under the Agreement; and (v) Assignor and Assignee are in compliance with all of the terms and provisions set forth in the Agreement on their part to be observed or performed, and no event of default specified the Agreement, nor any event which upon notice or lapse of time or both would constitute such an event of default, has occurred and is continuing.

3. The terms, covenants, conditions and warranties herein shall inure to the benefit of and shall be binding upon the parties hereto and their respective successors and assigns; subject, however, to all limitations on further assignment or transfer contained in the Agreement. In the event any provision of this Assumption should be invalid, the validity of the other provisions hereof and of the Agreement shall not be effected thereby. This Assumption shall be governed by and construed in accordance with the laws of the State of Ohio.

ASSIGNEE:

By: _____

Name: _____

Title: _____

Accepted:
Cleveland Thermal Steam Distribution, LLC

By: _____
Name:
Title:
Date: